Ecochillers®

ECC/ECT
AIR-COOLED SCROLL, SCREW AND RECIPROCATING CHILLER

Replaces: V2.2 (2023) **Version: V2.3**

INSTALLATION, OPERATION AND MAINTENANCE

CERTIFICATE
No. U8 003144 0001 Rev.00

Ramón Corona 645 B
Santa Anita, Tlaquepaque, Jalisco
México C.P. 45580
Ecochillers.net

USA, Canada and Europe
515 Congress Avenue Suite 2300
Austin, TX. 78701
Ecochillers.com

Versions	Changes made	Date	Written by	Revised	Approved
1.0	First Edition	01/02/2018	Armando Rojas		
1.1	First Edition with bugs fixed	05/06/2018	Irving Malpica		
1.2	Second revision	07/12/2019	Alberto Okamura		
1.3	Update	10/11/2022	Ricardo Tornel	Victor Ruiz	Daniel Casillas
2.0	Include Product Data	10/01/2023	Victor Ruiz	Daniel Casillas	Daniel Casillas
2.1	Include Expansion Valve info	20/06/2023	Victor Ruiz	Daniel Casillas	Daniel Casillas
2.2	Changes made in accordance with Intertek	12/09/2023	Victor Ruiz	Daniel Casillas	Daniel Casillas
2.3	Add c.pCO controller info	25/01/2024	Victor Ruiz		

IMPORTANT!

READ BEFORE YOU CONTINUE!

GENERAL SAFETY RULES

During assembly, installation, operation, maintenance, or service, individuals may be exposed to certain components or conditions including, but not limited to: heavy objects, coolants, materials under pressure, rotating components, and high and low voltage. Each of these items has the potential, if misused or handled improperly, to cause bodily injury or death. It is the obligation and responsibility of rigging, installation and operation/service personnel to identify and recognize these inherent hazards, protect themselves and proceed safely in completing their tasks. Failure to comply with any of these requirements could result in serious damage to the equipment and property on which you are located, as well as serious personal injury or death to them and the people on site.

This document is intended for use by owner-authorized installation, operation and maintenance personnel. These individuals are expected to possess independent training that enables them to perform their assigned tasks properly and safely. It is essential that, before performing any task on this computer, this person has read and understood the product labels, this document, and any reference materials. This person will also need to be familiar with and comply with all applicable government and industry rules and regulations related to the task at hand.

IMPORTANT!

LISEZ AVANT DE CONTINUER!

RÈGLES GÉNÉRALES DE SÉCURITÉ

Pendant l'assemblage, l'installation, le fonctionnement, la maintenance ou le service, les individus peuvent être exposés à certains composants ou conditions, y compris, mais sans s'y limiter : des objets lourds, des liquides de refroidissement, des matériaux sous pression, des éléments en rotation, des tensions élevées et basses. Chacun de ces éléments a le potentiel, s'il est mal utilisé ou manipulé de manière incorrecte, de causer des blessures corporelles ou la mort. Il incombe et relève de la responsabilité du personnel de gréement, d'installation, de fonctionnement ou d'entretien/service d'identifier et de reconnaître ces dangers inhérents, de se protéger eux-mêmes et de procéder en toute sécurité pour mener à bien leurs tâches. Le non-respect de l'une de ces exigences pourrait entraîner de graves dommages à l'équipement et aux biens sur lesquels vous vous trouvez, ainsi que de graves blessures corporelles ou la mort pour eux et les personnes sur le site.

Ce document est destiné à être utilisé par le personnel d'installation, d'exploitation et d'entretien autorisé par le propriétaire. Il est attendu que ces individus aient reçu une formation indépendante qui leur permette d'accomplir correctement et en toute sécurité leurs tâches assignées. Il est essentiel que, avant d'entreprendre toute tâche sur cet ordinateur, cette personne ait lu et compris les étiquettes du produit, ce document et tout matériel de référence. Cette personne devra également être familiarisée avec et se conformer à toutes les règles et réglementations gouvernementales et industrielles applicables liées à la tâche à accomplir.

Security symbols

The following symbols used in this document are to alert the reader to specific situations:

⚠ DANGER
It indicates a possible dangerous situation that will lead to death or serious injury if proper precautions are not taken.

⚠ CAUTION
Identifies a hazard that could result in damage to the machine, damage to other equipment, and/or environmental contamination if proper care is not taken or instructions are not followed.

⚠ WARNING
It indicates a potentially dangerous situation that will result in possible injury or damage to equipment if proper care is not taken.

ⓘ NOTE
Highlights additional information useful to the technician to complete the job that is being done successfully.

⚠ WARNING
External cabling, unless specified as an optional connection in the manufacturer's product line, should not be connected inside the control cabinet. Devices such as relays, switches, transducers and controls and any external wiring should not be installed inside the control board. All wiring must be in accordance with the published specifications of Ecochillers Corporation S.A. de C.V. and must be performed only by a qualified electrician. Ecochillers Corporation S.A. de C.V. It will NOT be liable for damage/problems resulting from incorrect connections to controls or the application of incorrect control signals. Failure to comply with this warning will void the manufacturer's warranty and result in serious property damage or personal injury.

Symboles de sécurité

Les symboles suivants utilisés dans ce document visent à alerter le lecteur de situations spécifiques :

⚠ DANGER
Cela indique une situation potentiellement dangereuse qui peut entraîner la mort ou des blessures graves si des précautions appropriées ne sont pas prises.

⚠ ATTENTION
Identifie un risque qui pourrait entraîner des dommages à la machine, des dommages à d'autres équipements et/ou une contamination de l'environnement si les précautions appropriées ne sont pas prises ou si les instructions ne sont pas suivies.

⚠ AVERTISSEMENT
Cela indique une situation potentiellement dangereuse qui peut entraîner des blessures possibles ou des dommages à l'équipement si les précautions appropriées ne sont pas prises.

ⓘ REMARQUEE
Cela indique une situation potentiellement dangereuse qui peut entraîner des blessures possibles ou des dommages à l'équipement si les précautions appropriées ne sont pas prises.

⚠ AVERTISSEMENT
Le câblage externe, sauf s'il est spécifié comme une connexion optionnelle dans la ligne de produits du fabricant, ne doit pas être connecté à l'intérieur de l'armoire de commande. Les dispositifs tels que les relais, les interrupteurs, les transducteurs et les commandes, ainsi que tout câblage externe, ne doivent pas être installés à l'intérieur du tableau de commande. Tous les câblages doivent être conformes aux spécifications publiées par Ecochillers Corporation S.A. de C.V. et doivent être réalisés uniquement par un électricien qualifié. Ecochillers Corporation S.A. de C.V. ne sera PAS responsable des dommages/problèmes résultant de connexions incorrectes aux commandes ou de l'application de signaux de commande incorrects. Le non-respect de cet avertissement annulera la garantie du fabricant et entraînera des dommages matériels graves ou des blessures corporelles.

IMPORTANT SAFETY INSTRUCTIONS

This appliance is not intended for use by persons (including children) with reduced physical, sensory, or mental capabilities, or lack of experience and knowledge unless they have been given supervision or instruction concerning the use of the appliance by a person responsible for their safety.

Children should be supervised to ensure that they do not play with the appliance.

INSTRUCTIONS DE SÉCURITÉ IMPORTANTES

Cet appareil n'est pas destiné à être utilisé par des personnes (y compris des enfants) ayant des capacités physiques, sensorielles ou mentales réduites, ou un manque d'expérience et de connaissance, à moins qu'elles n'aient été supervisées ou instruites sur l'utilisation de l'appareil par une personne responsable de leur sécurité.

Les enfants doivent être surveillés pour s'assurer qu'ils ne jouent pas avec l'appareil.

MODIFICATION OF THIS DOCUMENT

To comply with the policy of Ecochillers Corporation S.A. de C.V. For continuous product improvement, the information contained here is subject to change without notice. Ecochillers Corporation S.A. de C.V. makes no commitment to automatically update or provide updated information to the owner of the manual or product. Updated manuals, if applicable, can be obtained by contacting the nearest Ecochillers Corporation S.A. de C.V. service office or by accessing the Ecochillers Corporation S.A. de C.V. website in https://ecochillers.com

It is the responsibility of assembly, lifting and operation/service personnel to verify the applicability of these documents to the equipment. If there are any questions regarding the applicability of these documents, assembly, lifting and operation/service personnel should check whether the equipment has been modified and whether the equipment owner has up-to-date literature before performing any work on the cooler.

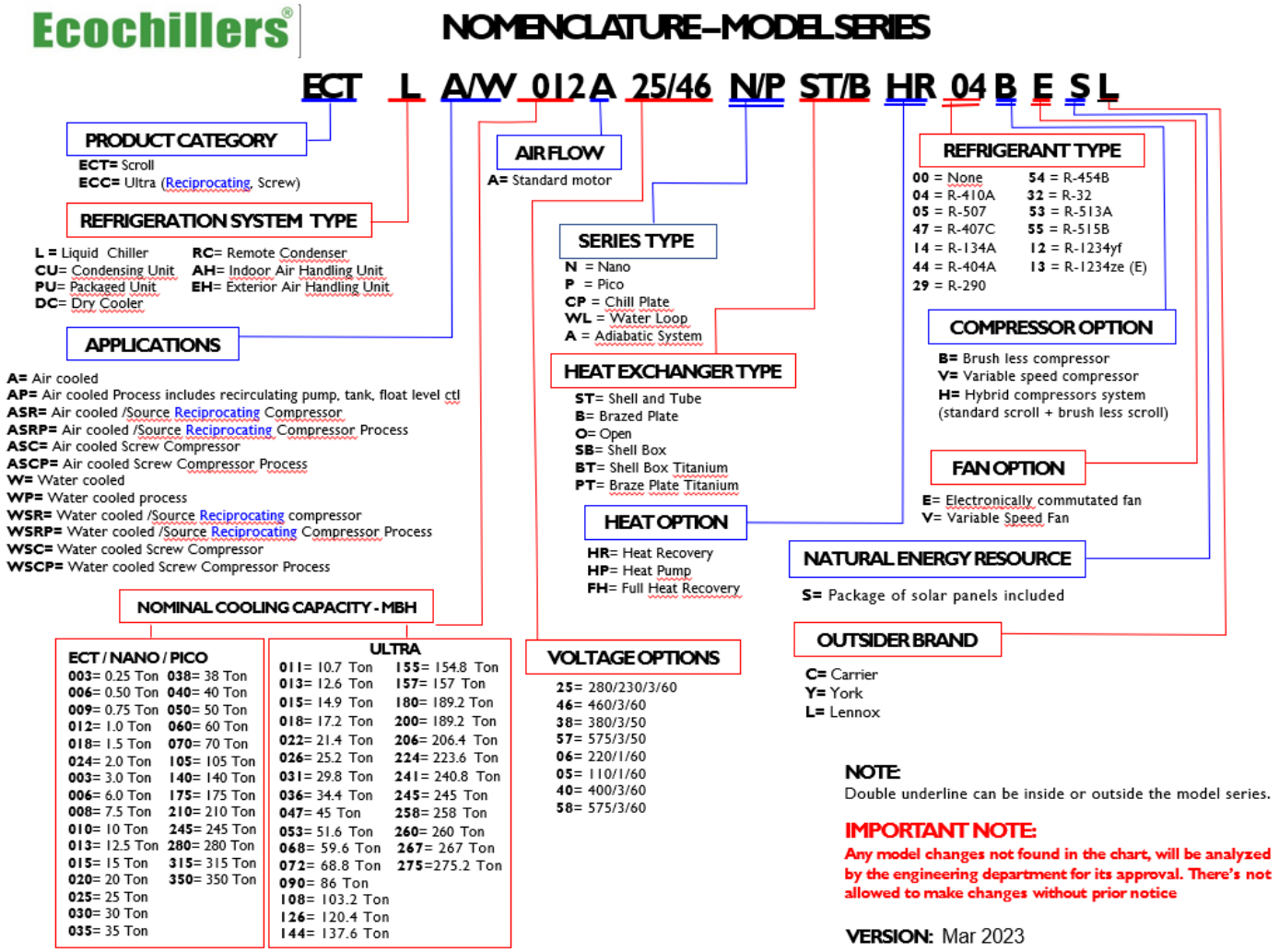

ÍNDICE

1 GENERAL INFORMATION

1.1 INTRODUCTION

ECOCHILLERS cooling units are manufactured to the highest design and construction standards to ensure high performance, reliability and adaptability of all types of air conditioning installations.

Rigging and lifting should only be performed by a professional rigger according to a written rigging and lifting plan. The most appropriate lifting and rigging method will depend on job-specific factors, such as available rigging equipment and site needs. Therefore, a professional surveyor must determine the rigging and lifting method to be used, and it is beyond the scope of the manual to specify the details of rigging and lifting.

This manual contains all the necessary information for the correct installation and commissioning of the equipment, together with the operating and maintenance instructions. The manuals should be read completely before attempting to operate or repair the unit.

All procedures detailed in the manual, including installation, commissioning and maintenance tasks, should only be performed by properly trained and qualified personnel.

The manufacturer shall not be liable for any injury or damage caused by improper installation, commissioning, operation or maintenance as a result of failure to follow the procedures and instructions detailed in the manual.

1.2 WARRANTY

ECOCHILLERS warrants all equipment and materials against defects in workmanship and materials for a period of eighteen months from the date of shipment or 12 months from the date of commissioning, whichever comes first, unless labor or extended warranty has been purchased as part of the contract.

The warranty is limited solely to the replacement of parts and the shipment of any defective parts or sub-assembly that have failed due to poor quality or manufacturing errors. All claims must be supported by evidence that the failure occurred within the warranty period and that the unit was operated within specified design parameters.

•The initial start-up of the unit must be carried out by trained ECOCHILLERS Authorized Service personnel.

•Only genuine ECOCHILLERS approved spare parts, oils, coolants and refrigerants should be used.

•All scheduled maintenance operations detailed in this manual must be performed at specified times by appropriately trained and qualified personnel (see SECTION 4 - MAINTENANCE).

• Failure to comply with any of these conditions will automatically void the warranty (see Warranty on this page).

1.3 HANDLING

These units are shipped as fully assembled units containing the full operating load, and care must be taken to avoid damage due to rough handling.

-Handle yourself with care-

1.4 Responsibility for safety

All precautions have been taken in the design and manufacture of the unit to ensure compliance with the safety requirements specified above. However, the person who handles, lifts, maintains, operates or works on any machinery is primarily responsible for:

•Personal safety, safety of other personal and machinery.

• Correct use of the machinery according to the procedures detailed in the manuals.

The content of this manual includes best practices and suggested working procedures. These are issued for guidance only and do not take precedence over the individual responsibility mentioned above and/or local safety regulations.

This manual and any other document supplied with the unit are the property of ECOCHILLERS, which reserves all rights. They may not be reproduced, in whole or in part, without the prior written permission of an authorized representative of ECOCHILLERS.

1.5 Avoid electrocution

Only personnel qualified in accordance with IEC (International Electrotechnical Commission) recommendations may be permitted access to electrical components. It is particularly recommended that all sources of electricity to the unit be shut off before any work is begun. ***Shut off main power supply at the main circuit breaker or isolator.***

1.6 MISUSE OF EQUIPMENT

1.6.1 Team approach

The unit is designed to cool water or glycol solutions and is not suitable for purposes other than those set out in these instructions. Any use of the equipment other than as intended, or operation of the equipment contrary to the relevant procedures may result in injury to the operator or damage to the equipment.

This unit should not be operated with parameters other than those established in the manual.

1.6.2 Structural support

The structural support of the unit must be provided as indicated in these instructions. Failure to provide proper support can result in operator injury or damage to equipment and/or building.

1.6.3 Mechanical force

The unit is not designed to withstand loads or stresses from adjacent equipment, pipes or structures. No additional components should be mounted on the unit. Any of these foreign loads can cause structural failure and lead to operator injury or damage to equipment.

1.7 General access

There are a number of areas and features that can be dangerous and potentially cause injury while working on the unit, unless proper safety precautions are taken. It is important to ensure that access to the unit is restricted to suitably qualified persons who are familiar with the potential hazards and precautions necessary for safe operation and maintenance of equipment containing high temperatures, pressures, and voltages.

1.8 Pressure systems ⚠

The unit contains steam and pressurized coolant, the release of which can be dangerous and cause injury. The user must ensure that care is taken during installation, operation and maintenance to avoid damage to the pressure system. Access to pressure system components should not be attempted unless they are properly trained and qualified personnel.

1.9 Electrical systems ⚠

The unit must be grounded. No installation or maintenance work should be attempted on the electrical equipment without first shutting down, isolating and blocking the power supply. The service

and maintenance of live equipment should only be carried out by properly trained and qualified personnel. Do not attempt to gain access to the control panel or electrical cabinets during normal operation of the unit.

Important:
The power supply to the unit must be set up in such a way that it can be switched on or off independently from that of other system components and other equipment in general, by means of a ***general switch***.

1.10 Rotating parts

Fan guards must be in place at all times and should not be removed unless the power supply has been isolated. If ducts are to be installed that require removing wire guards from the fan, alternative safety measures should be taken to protect against the risk of injury caused by rotating fans.

1.11 Sharp edges

The fins of the air-cooled condenser coils have metallic edges. Reasonable care must be taken when working in contact with coils to avoid the risk of minor abrasions and lacerations. The use of gloves is recommended.

Frame rails, brakes, and other components may also have sharp edges. Reasonable care must be taken when working in contact with any component to avoid the risk of minor abrasions and lacerations.

1.12 Refrigerants and Oils

The coolants and oils used in the unit are generally non-toxic, non-flammable and non-corrosive, and pose no special safety hazards. However, the use of gloves and safety glasses is recommended when working on the unit. The accumulation of refrigerant vapor, for example, due to a leak, presents a risk of suffocation in confined or enclosed spaces and attention should be paid to good ventilation.

Where there is a need to complete the COOLING SYSTEM, Ecochillers provides a label (shown below) allowing the installer to record the total LOAD and date of the resulting REFRIGERANT for each COOLING SYSTEM.

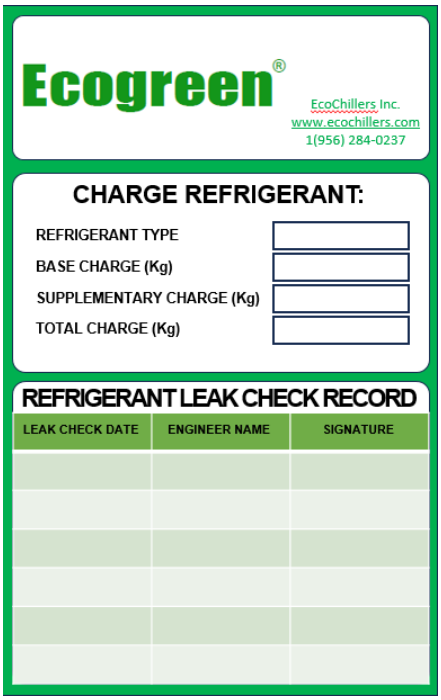
Ecogreen®
EcoChillers Inc.
www.ecochillers.com
1(956) 284-0237

CHARGE REFRIGERANT:

REFRIGERANT TYPE	
BASE CHARGE (Kg)	
SUPPLEMENTARY CHARGE (Kg)	
TOTAL CHARGE (Kg)	

REFRIGERANT LEAK CHECK RECORD

LEAK CHECK DATE	ENGINEER NAME	SIGNATURE

1.13 High temperature and pressure cleaning

High temperature and pressure cleaning methods (e.g., steam cleaning) should not be used anywhere in the pressure system, as this may activate the operation of pressure relief devices. Detergents and solvents, which can cause corrosion, should also be avoided.

2. COMPONENTS

2.1 *Compressors*

The compressors we use vary, depending on the parameters and capabilities of each equipment, as well as its function, these are the brands of compressors we handle: COOPELAND, CARLYLE and BITZER.

Of which there is a wide variety of models with the best conditions for cooling systems. Scroll, semi hermetic, screw or alternate type compressors incorporate a spiral design compatible in both axial and radial directions. All rotating parts are statically and dynamically balanced. A large internal volume and oil reservoir provide greater tolerance to liquids. Compressor crankcase heaters are also included for additional protection against liquid migration.

2.2 *Condenser*

ECCLA-P Series Air-Cooled Condensers In models 012 to 240 the condenser is Microchannel type made of 100% aluminum. Models 300 to 1200. The air-cooled condenser coil consists of 3/8-inch seamless copper pipe, mechanically expanded on the aluminum fins to ensure heat transfer.

Note: The Model 300 is being migrated to the Microchannel condenser, so your equipment could be assembled under this new platform.

2.3 *Condenser Fan Motors*

To carry out the movement of the air, the equipment has axial type fans, the fans are driven directly by means of single-phase motors in models 012 to 300 and three-phase of models 360 to 1200, these are rainproof to ensure continuous operation.

2.4 *Evaporator Welded plate exchanger*

The heat exchanger is composed of stainless-steel plates, tightly joined and welded to ensure high efficiency in heat exchange that is insulated with polyolefin elastomer foam of a minimum thickness of 1⁄2'' to provide optimal thermal insulation.

2.5 *Evaporator Shell and tube exchanger*

The hull and tube heat exchanger are made of reinforced steel and inside copper tubes to ensure high efficiency, lined with elastomer foam with polyolefin of a minimum thickness of 1⁄2 '' to provide optimal thermal insulation.

2.6 *Refrigerant Circuit*

To ensure optimal operation, the circuit is loaded with factory R-410 or R-507 refrigerant with its respective leak test, each is equipped with carefully selected thermostatic expansion valve to ensure continuous operation and adequate flow.

2.7 *Fans*

ZIHEL-ABEGG and ROSENBERG are the two lines we use to give the widest range of effectiveness, the condenser fans are composed of a corrosion-resistant aluminum hub and fiberglass-reinforced polypropylene composite blades molded into a low-noise aerodynamic section. They are designed for maximum efficiency and are statically and dynamically balanced for vibration-free operation. They are driven directly by independent motors and positioned for axial air discharge. Fan protectors are made of corrosion-resistant, large-caliber coated steel. All blades are statically and dynamically balanced for vibration-free operation.

2.8 *Distribution blocks*

The ABB range of terminals and distribution blocks offers a wide range of variants adapted to different needs. Saving installation time, Ease of installation of our distribution blocks with option of mounting on plate or profile. Increase in the number of outputs using our bridges (from two to four poles), Connection capacity up to 185 mm² (350 Kcmil). Distribution blocks: unipolar, tripolar and tetrapolar, up to 11 outputs. Connection terminals from two to ten poles, up to 20 outputs.

2.9 *ABB*

ABB is a technology leader in electrification and automation, the company's solutions connect engineering know-how and software to optimize the way things are manufactured, moved, powered and operated.

Many of the electrical components we use come from ABB, since they are of great utility and quality,

they give us a more practical and simple use for electrical, electronic or thermomagnetic components and they are UL certified such as:

1. Distribution blocks
2. Pin busbars
3. Terminals
4. Motor starters
5. Circuit breakers
6. Contactors
7. Connection jumper
8. Auxiliary contacts
9. Overload relays
10. Delay timer
11. Power Source
12. Interface relay
13. Voltage suppressor
14. Connection terminal
15. LED lighting

All these components are part of our electrical systems to provide better function and efficiency, each component works depending on the unit you want in addition to its models that vary in the same way.

2.10 Voltage relay

For our voltage relays we use the SELEC and V AGNER line, they are the most conventional and effective due to the easy use to thermomagnetic ally open and close the circuits, as well as monitor the electrical systems and isolate abnormal conditions of main and auxiliary circuits in electrical installations.

They work as a switch and can be used in voltages from 460v in the 900vpr series to 600v in the DTP3 series.

2.11 Control transformer

HONEYWELL, LEGRAND, SQUARE-D and Dayton, are the lines we manage for our electrical transformers. Power control transformers are designed to reduce supply voltages to control circuits. The complete line of transformers is available with optional primary and secondary fuse block installed in the plant or for panel mounting and can be dry contact, there are also several models for different voltages.

2.12 Distributor transformer

Like control transformers, these transformers are responsible for dissipating the electrical charge and distributing it gradually, thus dispersing a more precise voltage that can be controlled for functions of refrigerant use, such is the case of ACME transformers whose operation is for industrial use. In the case of single-phase transformers that only withstand up to 25KVA for the 3R range, they become energy economical, which makes them an excellent option for high voltage systems.

2.13 Crankcase heater

EMERSON, CARLYLE and BITZER, are the lines we use for the compressor of refrigeration and air conditioning system. The objective is to heat the compressor crankcase causing evaporation of the stagnant refrigerant liquid with the oil or lubricant in the compressor crankcase.

The most frequent models are usually from Emerson, since it has a wider variety that gives us better results. It also has a lot to do with the durability of the product, it is about giving the longest life to the compressor to efficiently evaporate the refrigerant flow.

2.14 Pressure switch

SUPCO and DANFOSS, are the best in terms of cooling systems due to their use to close or open an

electrical circuit depending on the pressure exerted by a fluid on an internal piston that moves until two contacts join, acts depending on the pressure when it is low, a spring pushes the piston in the opposite direction and the contacts separate. They offer a long and effective utility life for measuring air and liquid pressure.

2.15 Flow switch

The flow switch protects the water pump from freezing damage. When it detects the proper flow, it gives the start signal to the chiller, otherwise it deactivates it to avoid any breakdown. You have to remember that it's just a switch, it doesn't check the output gallop of the chiller, it's just a protection. If the pump fails or is cavitated, deactivates and does not let the chiller operate, this accessory is preventive, but it is the responsibility of the installer and end user to verify a correct installation that prevents interruption, cut or decrease of the flow of water to avoid damage by freezing. If this protective device is disabled by the customer, it invalidates the warranty.

2.16 Pressure translator

The translators we use are from the CAREL and EVCO lines, they allow us to see and convert the pressure to analog electrical signals with which the condensing unit, refrigeration or also called pressure transmitter is working.

2.17 Wires

We handle different calibers for electrical connections ranging from cal 16 to cal 2/0 that are equipped with terminals depending on the use of the wire have a resistance of up to 600 VDC and are of the brands QUINROZ and VIAKON. We keep our electrical panels well-ordered and structured so that our customers can understand the system and the routing on the boards is more visible.

2.18 Expansion valves

From the CAREL line, they are the only ones we use for our units are designed to meet any cooling capacity of up to 2000 kW in air conditioning and refrigeration equipment, they stand out above all for their excellent flow control, even when the refrigerant flow is low.

There are 3 reasons why these valves are the best:

1. Reliability over time, the standard design process used for Carel ExV valves includes accelerated life tests of 1*10(6) cycles.

2. Very precise control: this is ensured by Carel electronic controllers, specially designed to optimize the management of air conditioning and refrigeration equipment, with special emphasis on energy saving.

3. Perfect coolant tightness: Despite the rotational movement of the engine, the moving parts do not rotate during movement. This allows the use of a high-quality Teflon seal, which rests gently on the valve seat, without any slippage.

2.19 Driver for expansion valves

The EVD evolution driver can autonomously and independently control the CAREL EXV valve with the sole help of a digital input for commissioning. This solution adapts to any refrigeration circuit regardless of the controller used.

The EVCO drivers (EVDRIVE06) capable of managing both generic expansion valves and the most widespread stepper valves present in commerce, can also be used as a simple analog positioner and operate both in standalone mode and managed by a controller, guaranteeing an increase in the efficiency of the refrigeration circuit.

2.20 Cabinet

ABB and ELDON are the cabinets that we handle for their efficiency and excellent quality, as for the ABB cabinets of the SRN series are the most sophisticated in their line in addition to having the range of SR2 wall mounting cabinets is the offer of monobloc metal enclosures for small electrical panels and media for automation, Control and/or distribution command.

As soon as ELDON cabinets handle a series of cabinets Practical, efficient and with a wide range of standard sizes and accessories offers a solution to each application or can easily be customized to suit specific requirements. Stainless steel cabinets are designed for greater cleanliness and protection, offer high corrosion resistance and ensure equipment performance.

3 INSTALLATION

3.1 *Installation of ECOCHILLERS*

This equipment must be installed by qualified personnel and such installation must meet all of the following requirements.

3.2 *Proper installation*

3.2.1 Location

In order to obtain maximum capacity, the selection of the location of facilities must meet the following requirements:

1. The place must be ventilated so that air can circulate and discharge freely.
2. Install the unit in such a way that the discharge of hot air does not return again to the unit or other units.
3. Ensure that there are no airflow obstructions when entering or leaving the unit.
4. Remove obstacles that may block the entry or discharge of air.

3.2.2 Location of the Equipment

Location of the Equipment
Do not install equipment at outlets in contaminated air, and/or in other places with limited space. With this, the resonance and vibration of walls and other obstacles will be avoided as much as possible. A 10 ft (3 m) gap between units is required for airflow and a 6 ft (1.8 m) gap between units and walls is required for servicing to prevent air clogging and discharge (hot) condensate from the unit. Remove any obstacles that could block air suction and discharge. The final location of the equipment must ensure adequate ventilation so that the equipment operates at moderate condensing temperatures and pressures.

EMPLACEMENT DE L'ÉQUIPEMENT
Ne pas installer l'équipement dans des prises d'air contaminé et/ou dans d'autres endroits avec peu d'espace. Ainsi, on évitera autant que possible la résonance et les vibrations des murs et autres obstacles. Un espace de 3 mètres (10 pieds) entre les unités est nécessaire pour la circulation de l'air, et un espace de 1,8 mètre (6 pieds) entre les unités et les murs est requis pour l'entretien afin d'éviter tout risque de blocage de l'air et de décharge (chaude) du condensat de l'unité. Enlevez tout obstacle qui pourrait obstruer l'aspiration et la décharge de l'air. L'emplacement final de l'équipement doit assurer une ventilation adéquate afin que l'équipement fonctionne à des températures et des pressions de condensation modérées.

⚠ CAUTION
Appliance not accessible to the general public, install it in a secured area, protected from easy access.

⚠ ATTENTION
L'appareil n'est pas accessible au grand public, installez-le dans une zone sécurisée, protégée contre un accès facile

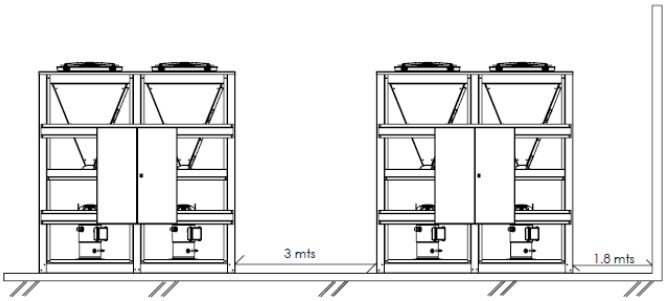

Install the equipment in such a way that the hot air discharged by them does not return again. Maintain sufficient space between equipment and the nearest walls for greater convenience of service and/or

maintenance. Eliminate any type of obstacle that could block air suction and discharge. The final location of the equipment must ensure adequate ventilation so that the equipment operates at moderate temperatures and condensing pressures.

3.3 Installation Chillers

3.3.1 Inspection

All chillers are shipped without bumps, each one has been carefully checked. As soon as the equipment is received, it should be inspected for any damage it may have suffered during the transport of the unit.

3.3.2 Storage of the Equipment

In case of not being installed within a few days of being received, it is strictly forbidden to stow one on the other, since they may suffer damage and the responsibility falls on the client.

3.3.3 ERRONEOUS INSTALLATIONS

1. Good ventilation cannot be guaranteed when the unit is installed indoors, it is advisable to place exhaust fans or ducts as short as possible so that the air goes outside, consult a ventilation specialist and the ECOCHILLERS engineering department.

2. To prevent flooding and promote proper drainage, fix the unit level, on a base 15 cm or 20 cm high that supports the weight of the unit or on the roof.

3. The installation air must not be susceptible to dust or oil to prevent the condenser coil from blocking. As a general precaution, it is recommended that the unit is not located near flammable gases.

4. It is recommended that the unit has enough space around it not only for adequate air suction and discharge but also to facilitate access to maintenance services.

3.3.4 Minimum space requirements

It is fundamental to respect minimum distances on all units in order to ensure optimum ventilation to the condenser coils. When deciding where to position the unit and to ensure a proper air flow, the following factors must be taken into consideration:

- Avoid any warm air recirculation
- Avoid insufficient air supply to the air-cooled condenser.

Both these conditions can cause an increase of condensing pressure, which leads to a reduction in energy efficiency and refrigerating capacity.

Any side of the unit must be accessible for post-installation maintenance operations.

3.4 BASIS FOR ASSEMBLY

The equipment can be installed on a concrete or plan base or and at the level of 15 cm or 20 cm high, on ceilings, or on “type I” joists capable of supporting a weight of at least 400 kg / m2. It is also recommended to fix the unit to the base of concrete or joist “type I” with neoprene rubbers of a thickness of at least 20 millimeters.

3.5 DELIVERY AND MANEUVERING

When transporting the unit, it is advisable to use a forklift or crane to lift it, for equipment of capacities from 50 to 100 tons, you should use space bars on top. When lifting the unit, secure it in such a way as to avoid contact with ropes or chains, keep the unit stable and not tilt. Consult the ECOCHILLERS service department.

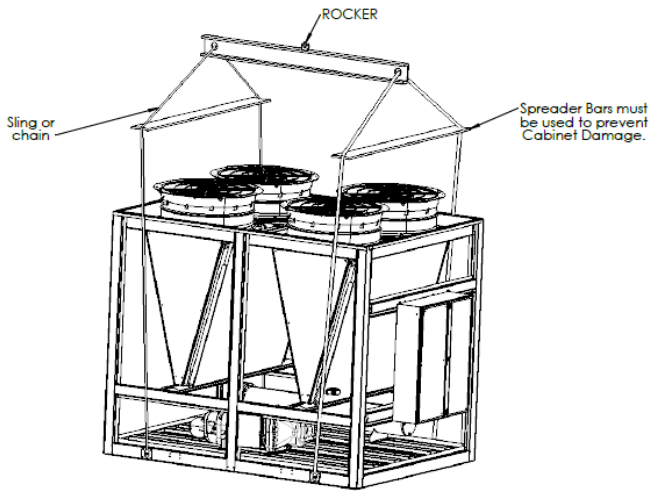

3.6 ASSEMBLY

When mounting, it is recommended to use expansion screws to support the unit to the base; It is recommended to place on the support points, neoprene heels or some other type of shock absorber to absorb vibration.

3.7 Noise considerations

Place the external unit away from sound-sensitive areas. If necessary, install rubber vibration isolators on all water pipes and use flexible electrical conduit. Consult an acoustical engineer regarding critical applications. Please also refer to Ecochillers engineering bulletins for information on chiller applications.

3.8 Unit isolation and leveling

For additional noise and vibration reduction, install neoprene isolators (optional).

Construct a cement insulated base for the unit or provide cement supports at the unit mounting points. Mount the unit directly on cement bases or supports.

Level the unit using the base beam as a reference. The unit should have a maximum offset of 1/4" (6 mm) relative to the span and width of the unit.

Use stops, if necessary, to level the unit.

3.8.1 Installing the neoprene insulator

1. Secure the insulators to the mounting surface using the mounting oblongs on the insulator base plate. DO NOT fully tighten the insulator mounting screws at this time.

2. Align the mounting holes in the base of the unit with the locating bolts screwed into the top of the insulators.

3. Lower the unit onto the insulators and secure the insulator to the unit with a nut. Maximum insulator deflection should be 1/4 inch (6 mm).

4. Level the unit carefully.
Fully tighten the insulator mounting screws.

3.9 WATER PIPE

The cold-water pipe must be lined with insulation to avoid loss of efficiency, in addition to installing a filter to ensure its quality, and fixing connections with clamps. The air purge valve should be installed at a higher point of the cold-water piping system, after installation is complete, perform leak tests and test at a pressure of 0.4 MPa (58 Psi) to ensure that there is no failure, then fill the system with water, open the vent valve, purge all air trapped in the pipe and close the air purge valve. A drain valve must be installed at the lowest point of the cold-water piping system. In order to obtain a long-lasting operation, it is advisable to use plastic water pipes, such as PVC, never use galvanized pipe.

⚠**Caution:** The unit should be connected to the automatic water supply system whose pressure should be greater than 1.5 Bar (21.75 Psi) and less than 6 Bar (87.9 Psi). The accessories shipped with the unit must be installed or premature failures may occur.

⚠**Caution:** Be sure to use clean water when filling the system to prevent corrosion and clogging of the system. If the chiller is operated with oily, salty, chlorinated or acidified water, it can cause loss of heat capacity.

⚠**Caution**: Do not use the Chiller water pump to clean the system (pipes). If you use the pump to fill the pipe, you must fill the system with clean water while the pump operates for 30 minutes and then clean the filter.

> **Note:** The design, construction, and acceptance check of the hydraulic system must comply with the applicable ASHRAE installation practice standards and codes. (American Society of Heating Refrigerating and Air Conditioning Engineers).

3.8 POWER PANELS

NEMA 3R/12 (IP55) rain/dust tight, powder painted steel cabinets with hinged, latched, and gasket sealed outer doors. Provide main power connection(s), control power connections, compressor and fan motor start contactors, current overloads, and factory wiring.

3.9 POWER SUPPLY

WARNING
All electrical work must be performed by the technician in accordance with local codes or regulations and the instructions provided in this manual.

ATTENTION
Tous les travaux électriques doivent être effectués par le technicien conformément aux codes ou réglementations locaux et aux instructions fournies dans ce manuel.

The appliance shall be installed according to national wiring regulations.

Before connecting the power, make sure that the supplied voltage is according to the unit's data board. Use the proper conductor gauge to power the unit. Connections must be made in such a way as to avoid tension at the terminals.

The unit must be connected to physical ground. Do not connect the physical ground conductor to the gas pipeline, city water pipe, or telephone pipelines, improper physical grounding can result in electric shock. Please install protective switch to prevent electric shock.

Make sure the sequence of the phases, for three-phase equipment identify L1, L2 and L3 and connect them to the terminal block on the electrical board, for single-phase equipment EEC012 to 060 (1 to 5 Ton.) feed on the bottom of the contactor, control board of the unit, or else the system will not boot and the controller will not turn on. Each electrical conductor must be firmly connected without voltage to the terminals.

No power supply cords should be in contact with refrigerant pipes and moving components such as compressor and motor fans.

The regulation of power supply or electrical connection varies according to the country and city, so the works must be carried out in accordance with the rules and regulations of each country.

Caution: In case of emergency (if the equipment suffers from a fire burn) stop the unit and disconnect the switch OFF power. Do not cover the air discharge from the unit with your hands or other foreign parts, or else the unit will be damaged or you will be damaged.

Attention : En cas d'urgence (si l'équipement souffre d'un incendie), arrêtez l'unité et débranchez l'interrupteur d'alimentation. Ne couvrez pas l'évacuation de l'air de l'appareil avec vos mains ou d'autres corps étrangers, sinon l'appareil sera endommagé ou vous serez endommagé.

3.10 Delivery and handling

The unit will be delivered to the job site fully assembled and will be charged with refrigerant and oil by Ecochillers. The unit will be stored and handled according to the manufacturer's instructions.

3.10.1 Refrigerant Charges

The following table shows the amount of refrigerant with which the chillers are supplied.

Modelo	Ton	Cant	Refrigerante
ECTLAP005A05NB4	0.5	600 gms	R454B
ECTLAP012A06NB4	1.0	800 gms	R454B
ECTLAP018A06NB4	1.5	900 gms	R454B
ECTLAP003A46SB4	3.0	2.26 Kg	R454B
ECTLAP004A46BA	4.0	1.36 Kg	R454B
ECTLA006A25SB4	6.0	1.6	R454B
ECTLAP010A46ST4	10	3.4	R454B
ECTLAP020A46B4VV	20	7.0	R454B
ECTLAP030A46SB4	30	13.1	R454B
ECTLAP035ASB4VV	35	11.2	R454B
ECTLA050A25ST4VV	50	11.3	R454B
ECTLA070A46ST4VV	70	18.5	R454B
ECTLAP080A46ST4VV	80	26.4	R454B
ECTLAP105A46ST4	105	28.1	R454B
ECTLAP140A38ST4VV	140	42.4	R454B
ECTLA175A46ST4VV	175	51.2	R454B
ECTLAP210A46SB4V	210	84.8	R454B

3.12 CIRCUIT BREAKER

A unit mounted circuit breaker with external, lockable handle (in compliance with N.E.C.), can be supplied to isolate the power voltage for servicing. (This option includes the Single-Point Power connection).

Following are the Ratings of Circuit Breakers:

3.12.1 Circuit Breakers 220 VAC

CAP(TON)	QTY	COMPRESSOR	AMP	QTY	FAN	AMP	MCCB(AMP)
4	1	ZP385KSE-TFS	17	1	FN050	3.3	40
6	1	ZP360KSE-TFS	27	1	FN050	3.3	60
8	1	ZP91KCE-TFS	35.6	1	FN050	3.3	80
10	1	ZP154KCE-TES	59	1	FN080	6.9	125
15	1	ZP182KCE-TES	74	1	FN080	6.9	160
20	1	ZP236KCE-TES	97	1	FN080	6.9	200
25	1	ZP296KCE-TES	112	1	FN080	6.9	250
30	2	ZP385KCE-TES	74	2	FN080	6.9	250
35	1	ZP385KCE-TES	131	2	FN080	6.9	300
40	2	ZP236KCE-TES	97	2	FN080	6.9	320
50	2	ZP296KCE-TES	112	2	FN080	6.9	400
60	4	ZP182KCE-TES	74	4	FN080	6.9	160
70	2	ZP385KCE-TES	131	4	FN080	6.9	450
80	4	ZP236KCE-TES	97	4	FN080	6.9	550
105	3	ZP385KCE-TES	131	6	FN080	6.9	600
140	4	ZP385KCE-TES	131	8	FN080	6.9	750
175	5	ZP385KCE-TES	131	10	FN080	6.9	890
210	6	ZP385KCE-TES	131	12	FN080	6.9	1000
245	7	ZP385KCE-TES	131	14	FN080	6.9	1150
280	8	ZP385KCE-TES	131	16	FN080	6.9	1320
315	9	ZP385KCE-TES	131	18	FN080	6.9	1450
350	10	ZP385KCE-TES	131	20	FN080	6.9	1600

3.12.2 Circuit Breakers 440 VAC

CAP(TON)	QTY	COMPRESSOR	AMP	QTY	FAN	AMP	MCCB(AMP)
4	1	ZPS35KSE-TFS	8	1	FN050	2	20
6	1	ZPS60KSE-TFS	11.5	1	FN050	2	25
8	1	ZP91KCE-TFS	16.2	1	FN050	2	40
10	1	ZP154KCE-TES	27	1	FN080	4.05	60
15	1	ZP182KCE-TES	34	1	FN080	4.05	80
20	1	ZP236KCE-TES	41	1	FN080	4.05	100
25	1	ZP296KCE-TES	51	1	FN080	4.05	125
30	2	ZP385KCE-TES	34	2	FN080	4.05	125
35	1	ZP385KCE-TES	65.4	2	FN080	4.05	150
40	2	ZP236KCE-TES	41	2	FN080	4.05	160
50	2	ZP296KCE-TES	51	2	FN080	4.05	160
60	4	ZP182KCE-TES	34	4	FN080	4.05	200
70	2	ZP385KCE-TES	65.4	4	FN080	4.05	200
80	4	ZP236KCE-TES	41	4	FN080	4.05	250
105	3	ZP385KCE-TES	65.4	6	FN080	4.05	300
140	4	ZP385KCE-TES	65.4	8	FN080	4.05	380
175	5	ZP385KCE-TES	65.4	10	FN080	4.05	450
210	6	ZP385KCE-TES	65.4	12	FN080	4.05	520
245	7	ZP385KCE-TES	65.4	14	FN080	4.05	590
280	8	ZP385KCE-TES	65.4	16	FN080	4.05	660
315	9	ZP385KCE-TES	65.4	18	FN080	4.05	740
350	10	ZP385KCE-TES	65.4	20	FN080	4.05	820

4 FIRST START-UP CHECKS

The unit must absolutely not be put into operation, even if for a very short period, without having first meticulously checking the following list in its entirety.
This general commissioning checklist can be used as a guideline and reporting template during the commissioning and hand-over to the user.
For more detailed commissioning instructions, please contact the local Ecochillers S.A. de C.V. Service department or authorized representative of the manufacturer.

ATTENTION: THE EQUIPMENT MUST BE ENERGIZED WITH 230 VOLTS OR 460 VOLTS ACCORDING TO THE SELECTED VOLTAGE, 24 HOURS BEFORE INITIAL START-UP, THIS IS THE RESPONSIBILITY OF THE END-USER OR THE CONTRACTOR WHO CARRIED OUT THE ELECTRICAL INSTALLATION.

GENERAL	Si	No	N/A
Check for external damage			
Is the equipment located in a machine room with adequate ventilation?			
Does the equipment have the recommended spaces according to the Manual?			
Is the equipment permanently wired and energized 24 hours before startup?			
Does the equipment have pipes and hydraulic pumping in the evaporator?			
Open all isolation and/or shut-off valves			
Verify that the unit is pressurized with refrigerant in all of its parts before making the connection to the hydraulic circuit.			
Check the oil level in the compressors			
Control wells, thermometers, manometers, controls, etc. installed			
Availability of at least 25% of the machine load for testing and control settings			
REFRIGERATED WATER	Si	No	N/A
Piping completion			
Install the water filter (even when not supplied) at the inlet of the exchangers.			
Install a flow switch, calibrate and test (off-on-off switching according to the water flow) the flow switch			
Water circuit filling, air bleeding			
Pump installation, (rotation check), filter cleaning			
Operation of the controls (three-way valve, bypass valve, damper, etc.)			
Water circuit operation and flow balance			
Check that all water sensors are correctly fixed in the heat exchange			
ELECTRICAL CIRCUIT	Si	No	N/A
Does the equipment have a thermo-magnetic main switch?			
Power cables connected to the electrical panel			
Starter and wired interlocking of the pump			
Electrical connection in compliance with local electrical regulations			
Install a main switch upstream of the unit, the main fuses and, where required by the national laws of the country of installation, a ground fault detector.			
Connect the pump contact(s) in series with the contact of the flow switch(es), so that the unit can operate only when the water pumps are running, and the water flow is sufficient.			
Provide the main voltage and check that it is within ± 10% of the classification given on the nameplate.			

5 MAINTENANCE

5.1 Introduction

In ECOCHILLERS we are committed to providing efficient and long-life units, but if you want to become even more efficient and further extend its operation, it is necessary to implement preventive maintenance periods that help us keep the unit in perfect condition and for a much longer period. This process is the responsibility of the unit owner, if it is not performed; Eventually the unit will begin to present failures and imperfections that over time would damage its useful life and its correct operation.

5.2 Important

If a system failure occurs due to improper maintenance during the warranty period, ecochillers will not be responsible for the costs incurred to get the system back up and running satisfactorily. The following is only a guide and covers only the components of the chiller unit. It does not cover other related system components that may or may not be supplied by ecochillers. System components should be maintained in accordance with the recommendations of the individual manufacturer, as their operation will affect the operation of the chiller.

5.3 Compressors

The oil level can only be tested when the compressor is operating in stabilized conditions, to ensure that there is no liquid refrigerant in the bottom housing of the compressor. When the compressor is operating in stabilized conditions, the oil level should be between 1/4 and 3/4 in the oil sight glass. When shutting down, it is acceptable for the oil level to fall to the lower limit of the oil sight glass.

5.3.1 Compressor heater

The Scroll compressors have a heating resistance at the bottom, with the aim of heating the oil and making it more dilute, and thus prevent the oil from absorbing part of the refrigerant liquid from the compressors. Therefore, prior to starting the Chiller, the heating elements must be turned on 24 hours before to heat the oil.

5.4 Fan motors

In general, these motors are lubricated and do not need constant maintenance, however, it is advisable to be attentive to any imperfect that may occur.

5.5 Condenser

Do not allow dirt to accumulate on condenser surfaces. Cleaning should be as frequent as necessary to keep the coils clean.

5.5.1 Cleaning Condenser Procedure

Dirty coil decreases the capacity of the system, its energy efficiency and may potentially cause system failures. It's necessary to put a sufficient protection grid and air filter when appropriate. In addition to this, the system and the coil should be periodically inspected and cleaned in accordance with the cleaning procedures.

Relative to fin and tube heat exchangers, micro channel coils tend to accumulate more of the dirt on the surface and of the less dirt inside which can make them easier to clean. The cleaning procedures are as follows:

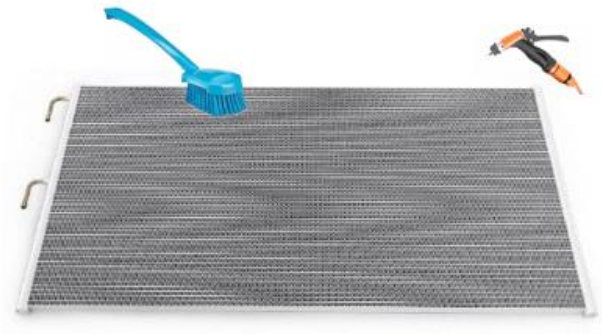

5.5.2 Remove surface debris

Remove surface dirt, leaves, fibers, etc. with a vacuum cleaner (preferably with a brush or other soft attachment rather than a metal tube), compressed air blown from the inside out, and/or a soft bristle (not wire!) brush. Do not impact or scrape the condenser with the vacuum tube, air nozzle, etc.

5.5.3 Rinse

Do not use any chemicals (including those advertised as coil cleaners) to wash micro channel heat exchangers. They can cause corrosion. **Rinse only.**

Hose the Micro Channel Condenser off gently, preferably from the inside out and top to bottom, running the water thru every fin passage until it comes out clean. Micro channels fins are stronger than traditional tube & fin coil fins but still need to be handled with care. Do not bang the hose into the coil. We recommend putting your thumb over the end of the hose rather than using a nozzle end because the resulting spray is gentler and the possibility for impact damage is less.

5.5.4 Optional blow dry

Micro channel condenser heat exchangers, because of their fin geometry, tend to retain water more than traditional fin & tube coils. Depending on the specific design and installation of your coil, it may be beneficial to blow or vacuum out the rinse water from your unit to speed drying and prevent pooling.

Warning!

It is possible to carefully clean a coil with a pressure washer, **but it is also possible to totally destroy a coil with a large pressure washer so we do not recommend their use. The washer water rated pressure of nameplate must be less than 50Bar, the ejection pressure of nozzle is less than 2Bar; the distance between nozzle and coil must be more than 1000mm, and keep nozzle centerline and coil surface as vertical angle as much as possible.**

Warranty claims related to cleaning damage, especially from pressure washers or chemical attack, will not be honored.

5.6 Friendly operation

5.6.1 Water pipes for condenser

(Applies only to water-cooled equipment) Water-cooled condensers can be connected directly to city water or well water, or used with a recirculation system equipped with a cooling tower.

a) In applications where city or well water is used to condense the coolant, an automatic flow regulation valve must be installed, operated by the discharge pressure, this valve is installed at the condenser water outlet.

b) System with cooling tower. When installing these cooling tower units, it is advisable to use a 3-way regulating valve as it is highly recommended, keeps the condensation pressure constant regardless of outside temperature conditions and ensures proper operation of the expansion valve at all times (not included, optional).

5.7 Recommendations

Pre-boot recommendations

1.- Close the inlet and outlet valves and open the bypass valve (if any) installed on the outside of the chiller.

2.- Operate the pump to circulate water in the system for a while.

3.- Open the filter and inspect it in case it requires cleaning.

4.- Clean the filter if necessary to avoid any type of clogging of the system pipe.

5.- Close the bypass valve and open the water inlet and outlet valves.

6.- With these recommendations, the system will be ready to start by qualified personnel of ECOCHILLERS Inc.

5.8 Considerations for the use of Chillers

1. To prevent freezing of water in the winter, if the chiller is out of service, all cold water in the hydraulic system must be completely drained, and thus avoid damage to the pipe due to freezing water, if operating in ambient temperature conditions below 5°C glycol-based antifreeze should be used. The service department always recommends the use of antifreeze in any water-cooling system, the use and installation of flow switches and flow meters to ensure proper operation and minimize the risks of freezing.

2. Do not obstruct condenser air inlets and discharges. Obstacles or some other material can cause the reduction of cooling capacity of the equipment and reduce the useful life of the equipment.

3. Antioxidant take measures against oxidation and regularly remove oxides when using water pipe vulnerable to corrosion.

4. Regularly carry out maintenance services, this will help you prolong the life of your equipment, and work at its maximum capacity and efficiency.

5. Recommend using clean water, and installing high-efficiency water filters.

5.9 Closed system vs. Open system

The Ecogreen Chillers have been designed to be installed in both options or open or closed water piping systems, it is the responsibility of the installer to select the most appropriate system according to the site, ECOCHILLERS recommends the open system with tanks for which we offer the Process series. In an open system, the chiller discharges the cold water into the tank while an external pump it into the process. It is recommended that the water tank has a division with the system of separate flows, it will prevent the hot water from the process.

5.10 Security Controls

Protective accessories such as high pressure, low pressure and electrical overload control in each of the compressors are supplied for the safety of the equipment during operation. The temperature control system intervenes directly in the stop and start option, if the water temperature falls below a value lower than desired, the freeze control will automatically stop the system (in equipment 012 to 240) and ensures the safety of the equipment. In models 300 to 1200 the freeze control optionally energizes the hot gas bypass solenoids, preventing the temperature inside the exchanger from falling below the parameter of 5°C, or reducing the chiller capacity, as long as the outlet temperature remains below the preset limit, the system will operate in hot bypass mode so the compressors work, but the temperature will not drop further, once the water outlet temperature rises from 5 ° C the bypass is deactivated allowing the cooling cycle again at 100% capacity.

5.11 Services and Maintenance

Contact the ECOCHILLERS engineering department regularly to give adequate efficiency and safe durability of your equipment. The design offers ease of maintenance and proper hydraulic or chilled water system and will eliminate the possibility of problems that may occur during normal operation, therefore, there is no need to maintain the cooling pipes while the unit is operating properly, except if the water pump fails or the insulation of the flow adjustment pipes and valves is deteriorated. It is recommended to keep track of the filter and replace it if it is dirty or clogged. Check the water level of the system to protect the hydraulic components from overheating and to protect them from freezing. All ice water systems must be completely drained during the winter when the unit is not operating to prevent damage to the water pipe from freezing. Corrective or preventive services must be performed by qualified personnel; In dirty, greasy or dusty environments, the condenser or heat exchanger should be properly cleaned at least once a month to maintain the maximum capacity of the equipment. Before reoperating the unit, do a new check of the unit's security checks. Under a normal environment and proper installation, you will only need to check the proper air circulation (suction and discharge).

5.12 Volume of Water in the System

The water flow for normal operations will be approximately 1.2 times more than the design flow required by the chiller. For example, if a chiller requires a flow of 120 GMP, then a flow of 134 GMP is recommended. Considering that the volume of water in the system is not only in the capacity of the evaporator, but also in the piping system and additional tank to ensure the adequate supply of water to the chiller and the process. If the volume of water is very low, there will be operating problems which may occur such as: compressor cycling, lack of cooling flow in chiller, inadequate cooling of the compressor, etc. It is for this reason that it is recommended to install water tanks with sufficient capacity to avoid problems of operation and capacity of the equipment.

6 CONTROL UNITS

Important

Read this document carefully before installation and before using the devices and follow all warnings;

Keep this document with the devices for future questions. Use the devices only in the modalities described in this document; Do not use the devices as security devices.

EV3 CHIL/HP and EVD CHIL/HP (EVCO) DRIVERS

6.1 Introduction

EV3 CHIL/HP and EVD CHIL/HP are controllers for the management of chiller and mono- and bi-circuit air-water and water-water heat pumps up to 6 compressors. EV3 CHIL/HP is available in standard 74 x 32 mm form factor, with integrated user interface; The interface is composed of a two-line LED display (with decimal point and function icons), four touch keys and guarantees a degree of protection IP65, easy to clean. The supply voltage is 12 VAC and the installation is planned of three panels with holding springs.

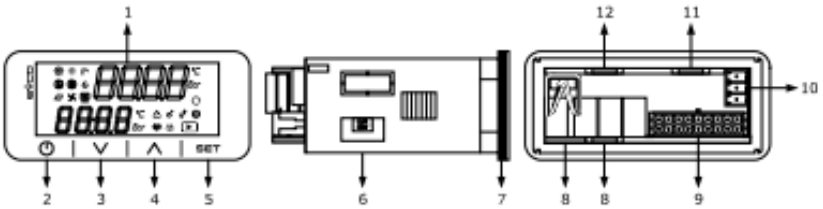

EVD CHIL/HP is available in standard format 4 DIN modules, in blind version (without display) or with two-line LED display. The supply voltage is 115... 230 VAC and the installation is planned on DIN rail, on a control board. For both types of controllers, two different remote user interfaces are available: EV3K01 (available in standard format 74 x 32 mm, consisting of a two-line LED display, by four touch keys, for installation on panel) and EVJ LCD (in 111 x 76 mm format, composed of a two-line static LCD display, by six touch keys, for installation on panel or wall).

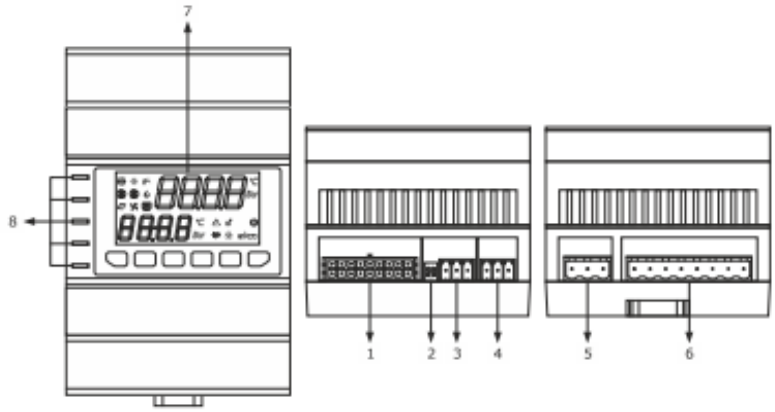

Configuring the regulation based on evaporation pressure, or condensation, it will be possible to manage condensing motor units (cooling) or dry cooler units. It is also possible to configure the controllers to respond to digital controllers (up to 6), or to an analog remote control from a remote master unit. The controllers can manage compressors and fans of type "on/off", as well as modulating type.

6.1.1 Available models, codes and technical characteristics

6.1.1.1 Drivers

The following spreadsheet describes the available models, codes and technical characteristics of the controllers.

In total there are 4 models of (evco) controllers which are: EV3 **CHIL, EVD CHIL, EV3 HP AND EVD HP.**

Code:

(A) EV3904LM2 (EV3904LM2GF with RS-485 communication port and clock)

(B) EV3906LM2GF

(C) EVD904BM9

(D) EVD904BM9MF

(E) EVD904LM9MF

(F) EV3914LM2 (EV3914LM2GF with RS-485 communication port and clock)

(G) EV3916LM2GF

(H) EVD914BM9

(I) EVD914BM9MF

(J) EVD914LM9MF

Of which:

(A) AND (B) are EV3 CHIL model

(C), (D) AND (E) are from the EVD CHIL model

(F) and (G) are from the EV3 HP model

(H), (I) AND (J) are from the HP EVD model

Device code	Connection kit code
EV3904LM2	CJAV37
EV3904LM2GF	CJAV37
EV3906LM2GF	CJAV39
EVD904BM9	CJAV38
EVD904BM9MF	CJAV38
EVD904LM9MF	CJAV38
EV3904LM2	CJAV37
EV3914LM2GF	CJAV37
EV3906LM2GF	CJAV39
EVD904BM9	CJAV38
EVD904BM9MF	CJAV38
EVD904LM9MF	CJAV38

Connectors (link kits) for wiring controllers must be ordered separately. The following worksheet shows the correspondence between the code of the controllers and the corresponding connectors.

6.1.1.2 Remote user interfaces

The following worksheet describes the available models, codes, and technical characteristics of remote user interfaces

EV3K01.

Size -74 x 32 mm

User interface - Two-line LED display + 4 capacitive keys

Installation - panel

Connections - Removable screw terminals

Power supply - 12 VAC/DC not isolated

Communication ports - INTRABUS

Other features - Alarm buzzer.

Codes - **Code EV3K01X0CT**

6.2 Description

The following paragraphs describe the different devices that can be used for the management of chiller and heat pump units.

6.3 *Description of EV3 CHIL/HP*

The following worksheet illustrates the meaning of EV3 CHIL/HP parts.

Part	Meaning
1	Display
2	On/off button (hereinafter also referred to as "on/stand-by button")
3	Decrease button (hereinafter also referred to as "down key")
4	Increment button (here and after also referred to as "UP button")
5	Settings button (here and after also referred to as "set button")
6	Termination line for microswitch RS-485 MODBUS
7	Board
8	Connection of the Edge connector to wire the electromechanical relay digital outputs (with reference to the following paragraphs, the digital outputs DO1... DO4)
9	Male Micro-Fit connector for power cabling, analog inputs, digital inputs, analog outputs and INTRABUS port
10	Removable screw terminal box only male to wire RS-485 MODBUS port
11	Connecting the Edge connector for wiring the triacs output (with reference to the following paragraphs, the TK1 output)
12	Connecting the Edge connector for wiring the triacs output (with reference to the following paragraphs, the TK2 output)

6.3.1 EVD CHIL/HP description

The following worksheet illustrates the meaning of the EVD CHIL/HP parts.

Part	meaning
1	Male Micro-Fit connector for wiring analog inputs, digital inputs, analog outputs and open collector digital output (with reference to the following paragraphs, OC1 digital output)
2	Micro switch for RS-485 MODBUS line
3	Removable screw terminal box only male to wire RS-485 MODBUS port
4	Removable screw terminal box only male to wire the INTRABUS port
5	Removable male screw terminal for wiring electromechanical relay digital outputs (with reference to the following paragraphs: DO1 and DO2 digital outputs)
6	Removable screw terminal for power cable, electromechanical relay digital outputs (with reference to the following paragraphs, digital outputs DO3 and DO4)
7	User interface (not available in blind versions).
8	Signal LED

6.3.2 EV3K01 description

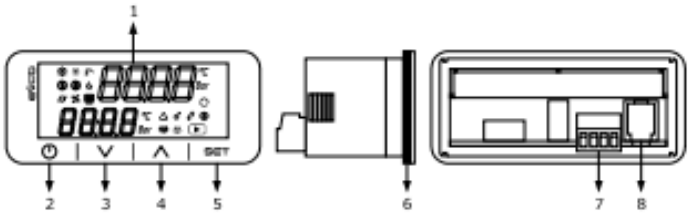

The following worksheet illustrates the meaning of the EV3K01 parts.

Part	Meaning
1	Display
2	On/off button (here and after referred to as "on/stand-by button")
3	Decrease button (here and after referred to as "down key").
4	Increase button (here and after referred as "bottom UP")
5	Configuration button (here and after referred as "bottom set")
6	Board
7	Screw terminal for power wiring and INTRABUS port
8	Not used.

6.3.3 Description of EVJ LCD

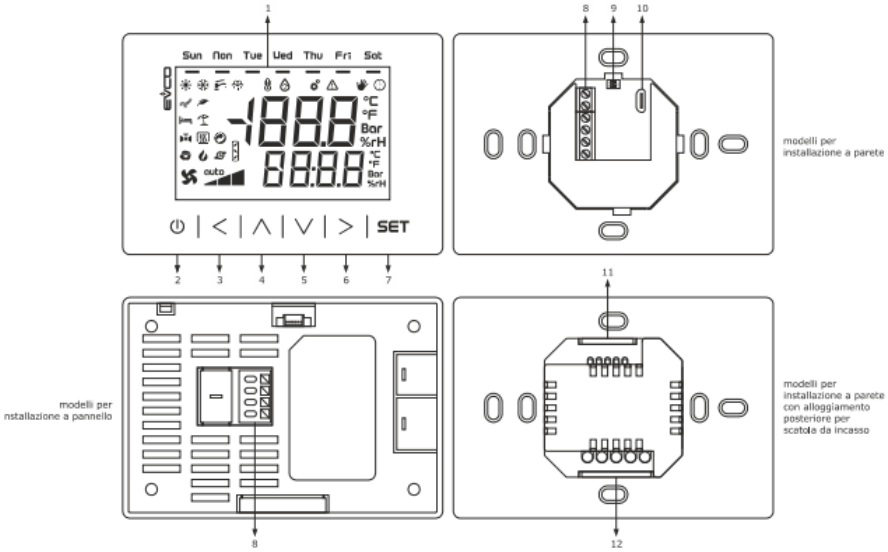

The following worksheet illustrates the meaning of EVJ LCD parts.

Part	Meaning
1	Display
2	On/off button (hereinafter also referred to as "on/stand-by button")
3	Left key (hereinafter also referred to as "left")
4	Increment button (hereinafter also referred to as "UP button")
5	Decrease button (hereinafter also referred to as "down")
6	Right key (hereinafter also referred to as "Right")
7	Settings button (hereinafter also referred to as "set").
8	Screw terminal for power wiring and INTRABUS port
9	- Micro switch for the termination of the RS-485 INTRABUS line in the EVJD900N2VWTX model - Not present, depending on model
10	Not used
11	Screw terminal for wiring analog inputs and INTRABUS port
12	Screw terminal for power wiring

6.3.4 Description of EVD094

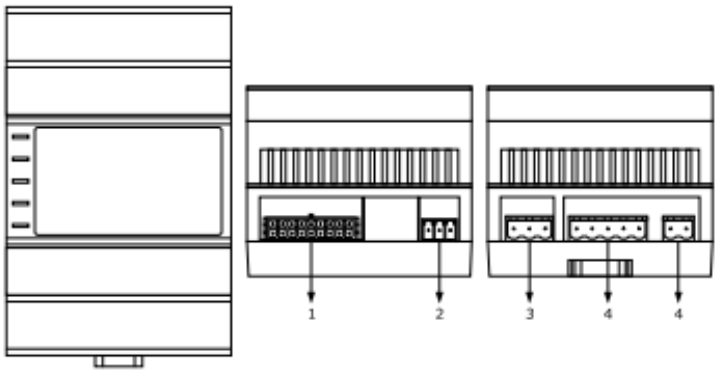

The following worksheet illustrates the meaning of the EVD094 parts.

Part	Meaning
1	Male Micro-Fit connector for wiring analog inputs, digital inputs, analog outputs and open collector digital output (with reference to the following paragraphs, OC1 digital output)
2	Removable screw terminal for wiring the INTRABUS port
3	Removable male screw terminal for wiring electromechanical relay digital outputs (with reference to the following paragraphs, digital outputs DO1 and DO2)
4	Removable male screw terminal for wiring electromechanical relay digital outputs (with reference to the following paragraphs, digital outputs DO3 and DO4)

6.4 *Electrical connection*

6.4.1 Description of EV3 CHIL/HP connectors

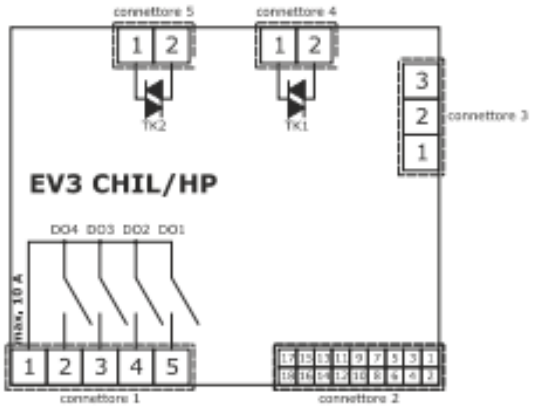

The following worksheets illustrate the meaning of EV3 CHIL/HP connectors. The forms refer to the maximum endowment.

Connector 1	
part	Description
1	Digital outputs of electromechanical relay DO1... DO4 (max. 6A): common
2	Digital output electromechanical relay DO4 (2A SPST): normally open
3	Digital output electromechanical relay DO3 (2A SPST): normally open
4	Digital output electromechanical relay DO2 (2A SPST): normally open
5	Digital output electromechanical relay DO1 (2A SPST): normally open.

Connector 2	
part	Description
1	IN10 dry contact digital input
2	Analog input IN1 (NTC/4-20 mA)
3	IN9 dry contact digital input
4	Analog input IN2 (NTC)
5	IN8 dry contact digital input
6	Analog input IN3 (NTC)
7	IN7 dry contact digital input
8	Analog input IN4 (NTC)
9	Voltage-free digital contact input IN6
10	IN5 Digital Input
11	AO1 analog output (0-10 V/phase cut-off/PWM)
12	Reference (GND) for analog inputs, digital inputs, analog outputs and powered INTRABUS port
13	AO2 analog output (0-10 V/phase cut-off/PWM)
14	INTRABUS port power signal
15	Power supply of analog inputs 4-20 mA (12 VDC, max. 40 mA)
16	Reference (GND) for analog inputs, digital inputs, analog outputs and powered INTRABUS port
17	EV3 CHIL power supply (12VAC not isolated)
18	EV3 CHIL power supply (12VAC not isolated)

Connector 3	
part	Description
1	Port RS-485 MODBUS: +
2	Port RS-485 MODBUS: -

3	Port RS-485 MODBUS: reference (GND). NB: Do not connect the cable shield.

Connector 4	
part	Description
1	Out Triac TK1: GND
2	Out triac TK1 (200 mA): OUT

Connector 5	
part	Description
1	Out Triac TK2: GND
2	Out Triac TK2 (2 A): OUT

6.4.1.1 Example of EV3 CHIL/HP electrical connection

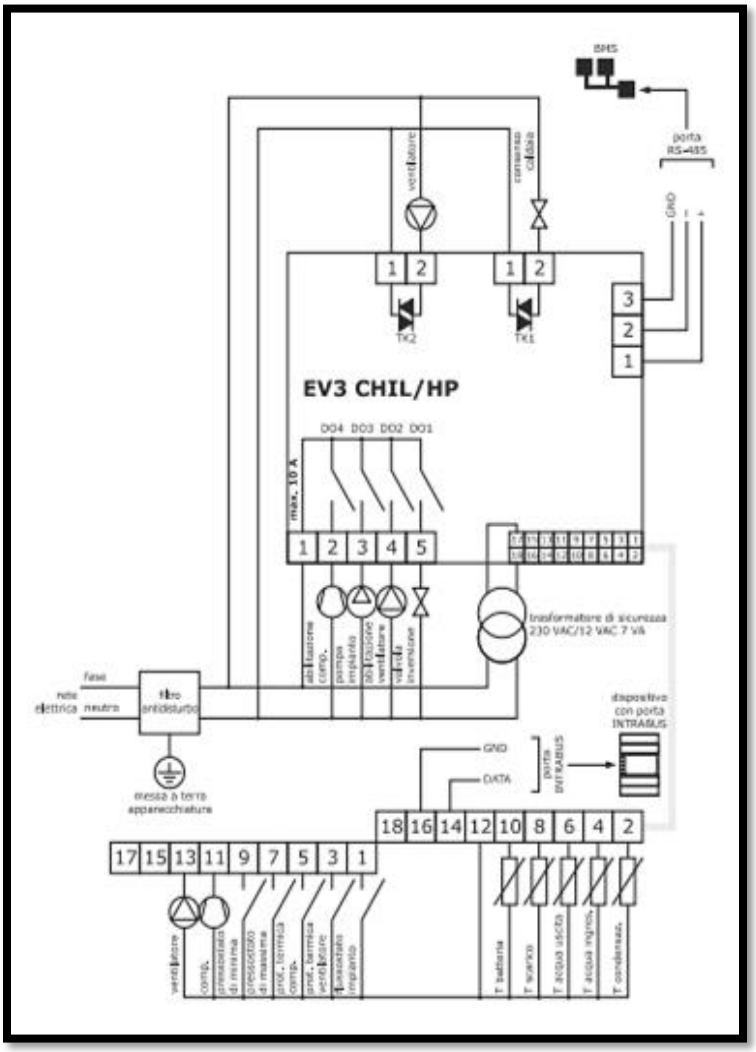

6.4.2 Understanding CHIL/HP EVD Connectors

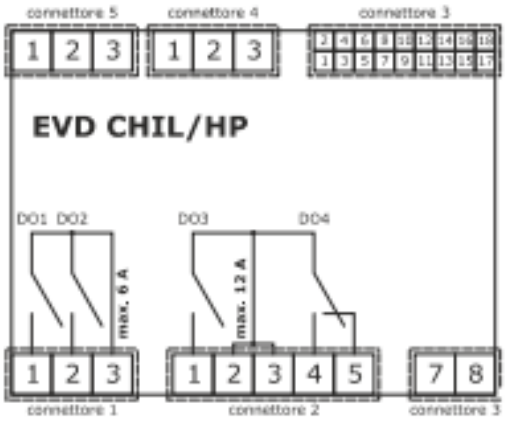

The following worksheets illustrate the meaning of EVD CHIL/HP connectors.

Connector 1

Part	Meaning
1	Normally open digital output of electromechanical relay DO1 (3 A SPST)
2	Normally open digital output of DO2 electromechanical relay (3 A SPST)
3	Common digital outputs of electromechanical relay DO1... DO2 (max. 6 A)

Connector 2

Part	Meaning
1	Normally open digital output of electromechanical relay DO3 (12 A SPST)
2	Common digital outputs of electromechanical relay DO3... DO4 (max. 12 A)
3	Common digital outputs of electromechanical relay DO3... DO4 (max. 12 A)
4	Normally open digital output of DO4 electromechanical relay (8 A SPDT)
5	Normally open closed digital output of electromechanical relay DO4
7	Power supply EVD CHIL/HP (115... 230 VAC insulated)
8	Power supply EVD CHIL/HP (115... 230 VAC insulated)

Connector 3

Part	Meaning
1	AO2 analog output (0-10 V/PWM/By phase cut)
2	AO1 analog output (0-10 V/PWM/By phase cut)
3	Reference (GND)
4	IN1 analog input (NTC/4-20 mA/0-5 V/0-10 V or dry contact)
5	IN10 analog input (NTC or dry contact)

6	IN2 analog input (NTC/4-20 mA/0-5 V/0-10 V or dry contact)
7	IN9 analog input (NTC or dry contact)
8	IN3 analog input (NTC or dry contact)
9	IN8 Pulse Dry Contact Digital Input
10	IN4 analog input (NTC or dry contact)
11	IN7 Pulse Dry Contact Digital Input
12	IN5 analog input (NTC or dry contact)
13	Reference (GND)
14	IN6 dry contact digital input
15	Power supply analog inputs metric ratios (5VDC, Max 40 mA)
16	Auxiliary power output 12 VDC, max. 40 mA
17	Digital output open collector OC1 (12 V, max. 40 mA)
18	Reference (GND)

Connector 4

Part	Meaning
1	Reference (GND)
2	Negative signal port RS-485 MODBUS
3	Positive signal port RS-485 MODBUS

Connector 5

Part	Meaning
1	Reference (GND) INTRABUS port
2	INTRABUS signal port
3	12 VDC OUT

6.4.2.1 Example of CHIL/HP EVD electrical connection

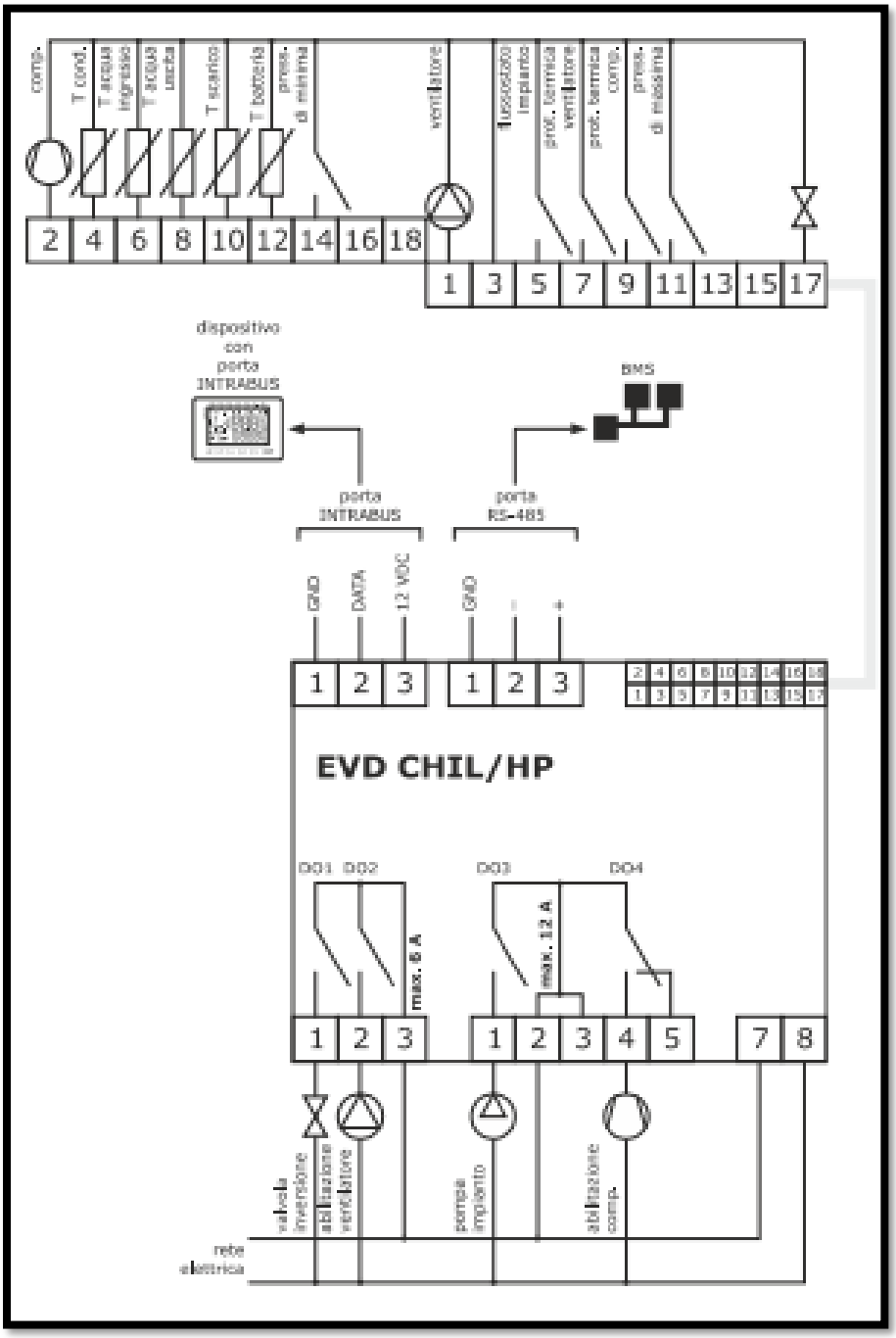

6.4.3 Understanding EV3K01 Connectors

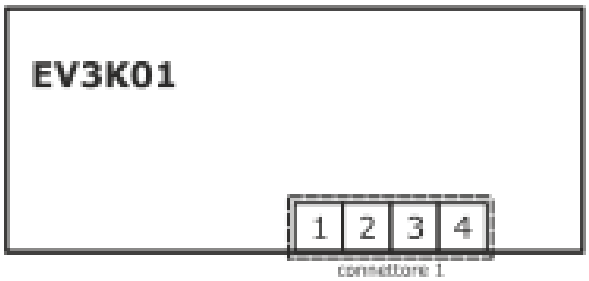

Connector 1

Part	Meaning
1	EV3K01 power supply (12 VAC/DC not isolated); If the device is DC powered, connect the positive terminal
2	Reserved EVCO
3	INTRABUS Port Signal
4	Reference (GND) power and INTRABUS Port

6.4.3.1 EV3K01 electrical connection example

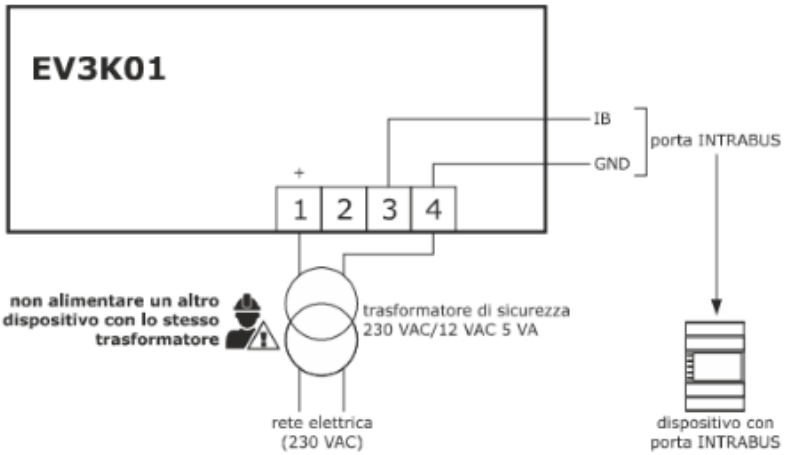

The following drawing illustrates an example of EV3K01 linking. In the EV3K01 example powered by a CHIL/HP EVD controller.

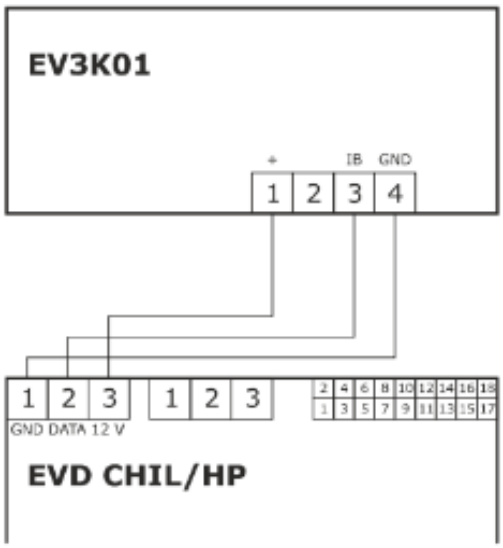

6.4.4 Understanding EVJ LCD Connectors

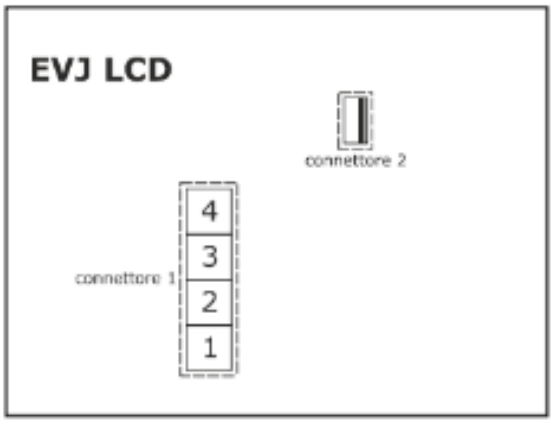

Connector 1

Part	Meaning
1	Reference (GND) INTRABUS port
2	INTRABUS Port Signal
3	EVJ LCD power supply (12 VAC/DC not isolated); If the device is DC powered, connect the negative terminal
4	EVJ LCD power supply (12 VAC/DC not isolated); If the device is DC powered, connect the negative terminal

6.4.4.1 Example of electrical connection of EVJ LCD models for panel installation

The following drawing illustrates an example of linking EVJ LCD models for panel installation. In the example EVJ LCD has Independent feeding.

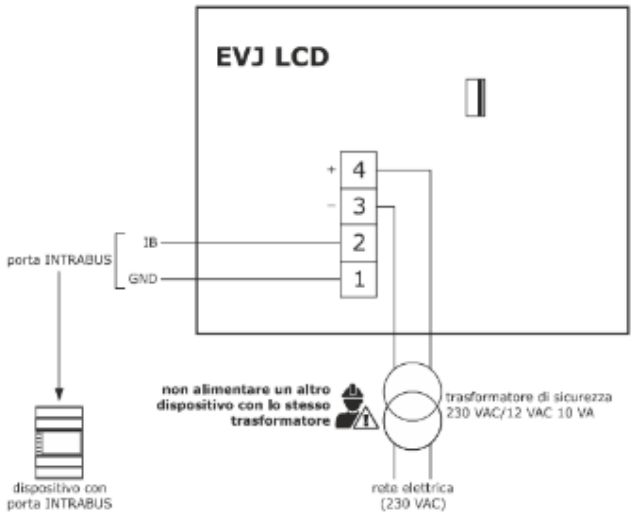

6.4.5 Understanding EVD094 Connectors

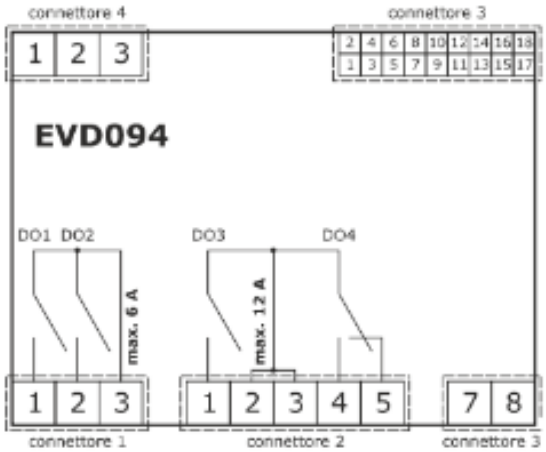

The following worksheets illustrate the meaning of EVD094 connectors.

Connector 1

Part	Meaning
1	Normally open digital output of electromechanical relay DO1 (3 A SPST)
2	Normally open digital output of DO2 electromechanical relay (3 A SPST)
3	Common digital outputs of electromechanical relay DO1... DO2 (max. 6 A)

Connector 2

Part	Meaning
1	Normally open digital output of electromechanical relay DO3 (12 A SPST)
2	Common digital outputs of electromechanical relay DO3... DO4 (max. 12 A)
3	Common digital outputs of electromechanical relay DO3... DO4 (max. 12 A)
4	Normally open digital output of DO4 electromechanical relay (8 A SPDT)
5	Normally open closed digital output of electromechanical relay DO4
7	EVD094 power supply (115... 230 VAC isolated)
8	EVD094 power supply (115... 230 VAC isolated)
9	EVD094 power supply (115... 230 VAC isolated)

Connector 3

Part	Meaning
1	AO2 analog output (0-10 V/PWM/By phase cut)
2	AO1 analog output (0-10 V/PWM/By phase cut)
3	Reference (GND)
4	IN1 analog input (NTC/4-20 mA/0-5 V/0-10 V or dry contact)
5	IN10 analog input (NTC or dry contact)
6	IN2 analog input (NTC/4-20 mA/0-5 V/0-10 V or dry contact)
7	IN9 analog input (NTC or dry contact)
8	IN3 analog input (NTC or dry contact)
9	IN8 Pulse Dry Contact Digital Input
10	IN4 analog input (NTC or dry contact)
11	IN7 Pulse Dry Contact Digital Input
12	IN5 analog input (NTC or dry contact)
13	Reference (GND)
14	IN6 dry contact digital input
15	Reserved
16	Auxiliary power output 12 VDC, max. 40 mA
17	Digital output open collector OC1 (12 V, max. 40 mA)
18	Reference (GND)

Connector 4

Part	Meaning
1	Reference (GND) INTRABUS port

2	INTRABUS Port Signal
3	12 VDC OUT

6.4.5.1 EVD094 Electrical Connection Example

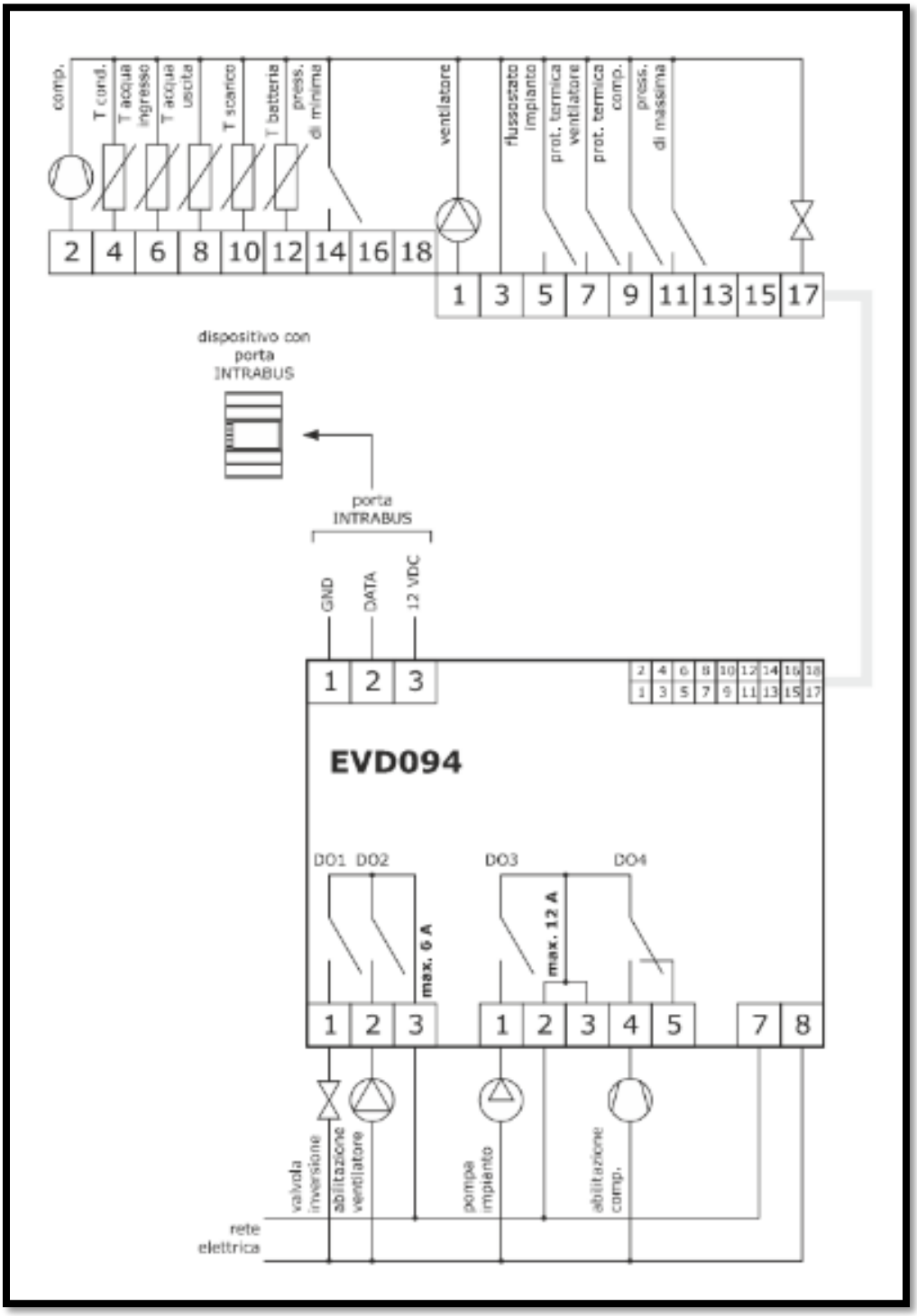

6.5 *Description of the user interface*

6.5.1 Key functionality

EV3 Button	EVD Butoon	EVJ Button	Name	Functionality
⏻	esc	⏻	ON/stand-by	- if you press and hold turn the device on or off and return to the home page if a bottom menu is being displayed - During parameter settings, it has the "back" button function
SET	↵	OK	Set	-if you press and hold allows you to enter the settings menu (SEt menu) - A short press allows you to modify the setpoint and confirm it - in the menu navigation, it becomes the "Enter" button
∧	△	∧	UP	- Allows you to scroll in a top menu - Allows you to increase the value of a parameter - A prolonged pressure allows the visualization of I/O states
∨	▽	∨	Down	- Allows you to scroll in a lower menu - Allows you to decrement the value of a parameter - If no digital input is set as operating mode, the Machine Operation mode will be modified at each extended pressure according to the sequence Cold heat □ heat □ + cold DHW □ (if functions are enabled)
-	◁	<	Left	EVJ - from the home page, with a simple press allows access to the quick menu of setpoint parameters. EV3 - not present EVD - not used
-	▷	>	Right	EVJ - from the home page, with a simple press allows access to the quick configuration menu of the Time Bands. EV3 - not present EVD - not used

6.5.2 Display

The device can be turned on or off using the on/stand-by button. When the device has been turned on from button, it can be put on Stand-By from remote acting on the digital input on/off remote by means of an interrUPtor.

The user interface has two display modes.

Primary display mode:

- The upper line shows the regulated value (parameter I01), while the lower line displays one of the probes of choice, the setpoint or the schedule (parameter G08). If present, active alerts are displayed. If remote regulation is active, the upper line shows the status (ON or off) and the lower line the number of steps or the percentage of activation of the compressors.

- When the device is turned on from button but in Stand-by from remote, the label "oFFd" appears in the bottom line.

- When the device is turned off from the button, the label "off" appears in the upper line and the time in the lower line (if present and enabled: the RTC, otherwise 4 lines are displayed: ----).

Menu display modes:

- Visualizations depend on the level one is at, according to a "tree" system in which the bottom line visualizes a subcategory of what is displayed on the top line. To assist the user in identifying the configured display type, labels and codes are used.

6.5.2.1 Icons

The icons have four flicker modes:

- Slow flashing: 0.5 Hz

- Normal flashing: 1 Hz

- Fast flashing: 2.5 Hz

- Flashing every 5 s (1 s off, 4 s on).

The following worksheet illustrates the meaning of the EVJ LCD, EV3 CHIL/HP, EVD CHIL/HP and EV3K01 signage icons.

EV3 CHIL/HP and EV3K01 display:

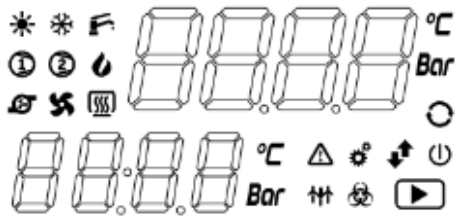

6.5.2.2 Signages

EVD CHIL/HP display:

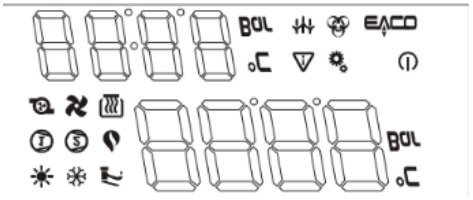

EVJ LCD display :

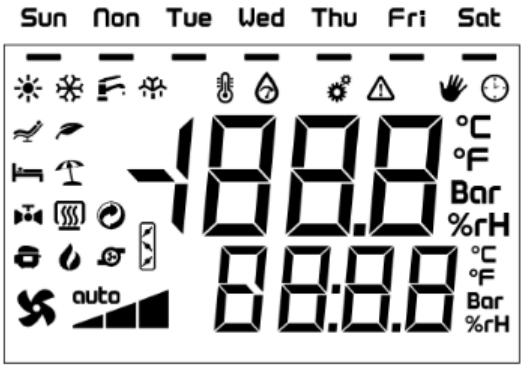

EVJ LCD	EV3 CHIL/HP, EVD CHIL/HP, EV3K01	COLOR	MEANING
		Green	Active function Depends on parameter G05 (default 0) 0 = Heating ON / =cooling ON 1 = Heating ON / =cooling ON
		Green	Domestic hot water (DHW) - ON function available not active - OFF function not available - BLINK function available active
no present	①	Green	Compresor1 Single-circuit unit: - ON if a single compressor is turned on - OFF if all compressors are turned off - BLINK if the first compressor is on timing Bi-circuit unit - ON if at least one compressor in circuit 1 is switched on - OFF if no compressor in circuit 1 has turned on - BLINK if a timing is active (regardless of the circuit)
No present	②	Green	Compresor2 Single-circuit unit: - ON if at least two compressors are switched on - OFF if no more than one compressor is turned on - BLINK if a compressor other than the first is tempoporized Bi-circuit unit - ON if at least one compressor in circuit 2 is switched on - OFF if no compressor in circuit 2 switched on - BLINK if the timing is running (regardless of the circuit)
	No present	Green	Compressor - ON if one or more compressors are turned on - OFF if all compressors are turned off - BLINK if timing is running
		Green	Bomb - ON if the pump is on - OFF if the pump is off
		Green	Ventilador - ON si el ventilador está encendido - OFF si el ventilador está apagado
		Green	Installation resistance - ON if the resistor is on - OFF if the resistor is off

°C °F	°C °F	Ambar	Unit of measurement of the value displayed on the top display when the probe is set to temperature
Bar	Bar	Ambar	Unit of measurement of the value displayed on the top display when the probe is set to pressure
		Ambar	Desescarche - ON if defrost is in operation - OFF if defrost is not working or has finished - BLINK (2 s), if a defrost entry timing is running, or (1 s) if drip is running
No present		Ambar	Run - ON if the controller is turned on - OFF if the controller is disabled
		RED	Alarm - ON if an alarm is running - OFF if no alarm is in operation
		RED	LED configurations - ON if the device is not in primary display - OFF during normal operation
No present		RED	On/stand-by - ON if the controller has been turned off (along with "off" signaling on display) - OFF if the controller turns on
°C	°C	RED	Unit of measurement of the value displayed on the top display when the probe is set to temperature
Bar	Bar	RED	Unit of measurement of the value displayed on the top display when the probe is set to pressure
No present		Ambar	Antilegionella - ON if the function is active - OFF in alternative
No present	EVCO	Ambar	Logos (present only on the EVD9 LED display) - Always on
No present		RED	INTRABUS/RS-485 - Slow flashing if an INTRABUS or RS-485 communication is in operation - OFF if no communication is active

The following worksheet illustrates the meaning of EVD CHIL/HP signaling LEDs.

Led	Color	Meaning
On	Green	LED power supply - ON if the controller is powered - OFF if the controller is not powered
Run	Green	LED RUN - ON if the controller turns on - OFF if the controller is disabled

⚠	RED	LED alarma - ON if an alarm is running - OFF si no alarm is operating
IB	Ambar	LED INTRABUS - BLINK if an INTRABUS communication is in operation - OFF if no communication is active
RS485	Ambar	LED RS-485 - BLINK if an RS-485 communication is in operation - OFF if no communication is in operation

6.6 MENU

6.6.1 Accesibilidad

The display of the menu is conditioned by the level of visibility (modifiable from serial port) associated with each iten, the display of the parameters is conditioned to the visibility of each parameter. The user can modify the level of visibility by configuring the desired value (see paragraph parameters, controls reference) via serial port, both for the different itens of the menu and for each parameter.

For navigation within the menus are available 3 levels of accessibility, of which 2 subject to password insertion:

U User: always visible

S Service: visible if the Service password (parameter G11, default -12) or the manufacturer password (parameter CF10, pre-determined: -123) is inserted.

M Manufacturer: visible if the manufacturer password is inserted (parameter G12, pre-determined -123)

H Hidden: never visible from user interface.

6.6.2 Quick menu

A simple press of the SET (EV3) / Send (EVD) / OK (EVJ) button allows you to enter directly into the SEt menu; the prolonged press of the down key, if no digital input is configured as an operating mode, modifies the active operating mode of the machine and is according to the sequence cold heat □ heat □ + cold ACS (□if the functions are enabled); the prolonged press of the UP button (up arrow) allows you to enter directly into the Pro sub-menu of the IO (input/output) menu.

Pressing the on/Standby (EV3/EVJ) / esc (EVD) button allows you to exit the active menu.

6.6.3 Access to the general menu

From the home page, pressing for 3 seconds the SET button (- EV3), send (- EVD) or OK (| OK | - EVJ LCD) you enter the first accessible page of the general menu. By pressing the UP or Down keys you can navigate between the menus according to the order displayed in the following paragraph. Pressing the SET/send button takes you to the selected menu. The level of access is determined by the active password that is inserted by accessing the relative menu (PSS); Once the desired password has been entered, the device does not return immediate feedback but, if the password entered is correct, it will allow access to previously inaccessible parameters/menu. Pressing the on/Standby (EV3/EVJ) / esc (EVD) button allows you to exit the active menu.

6.6.4 List of menus

Here are the available menus:

SEt Allows access to the quick configuration of setpoint of regulation

IO Allows access to the display of I/O input/output values

Pro Displays the temperature or pressure values of inputs configured as probes

DiG Allows you to view the status of inputs configured as digital inputs

AO Displays the status of outputs configured as analog outputs or triacs/open collector

REL Allows you to view the status of outputs configured as digital outputs

ALM Allows you to view the list of alarms in operation

PAr It allows to visualize and modify the parameters of the device; the parameters are agrUPados based on its functionality (identified on display with a label), while each parameter is characterized by an alphabetical index followed by 2 digits, according to the following sheet:

Group	Identification label	Parameter index
Generals	PG	G
Alarms	PA	A
I/O	PI	I
Regulation	Pr	r
Descarche	Pd	d
Compressors	PC	C
Fans	PF	F
Pump	PP	P
Electric resistence	PH	H
Solar panels	PS	S

OHr Allows you to view the operating hours of

OR UNITED

OC1 compressor 1

OC2 compressor 2

OC3 compressor 3

OC4 compressor 4

OC5 compressor 5

OC6 compressor 6

OP pump

OF1 fan 1

OF2 fan 2

OF3 fan 3

OF4 fan 4

-The operating hours can be overridden with a prolonged press (about 3") of the set button if the password is inserted at least at service level. This operation clears the eventual "operating hours" alert of the loads.

HiS Allows you to record up to 20 alarm events.

diS: History details are displayed on the lower display with the following sequence: Progressive alert (starting from 0) Alert code

And xx Year if available clock or alarm enumerative

M xx Mes si reloj available

D xx Day if available clock

Hh:mm Hours:minutes if available watch

cLS: Erase the history

PSTN On devices equipped with a clock, allows you to set the time

YEA: Set year

Month: set month

DAY: Set day of the month

UdA: Set day of the week

Hou: Set time

Min: Set minute

InFo Allows you to visualize the data related to the project in this sequence

-Project

-Variation

- Revision:Version

PAS Allows you to enter the password to access the desired level: parameter C18 for Service level, C19 for Manufacturer level.

6.6.5 Menu alarms and historical alarms

The Alarms Menu allows you to visualize in sequence all the possible active alarms, for the reset of manual reset alerts (if the conditions that have generated the alarm disappeared) it is requested to pay / turn on the device. The Historical Alarms Menu contains the last 20 alarms no longer active. By accessing the diS submenu (history display) and pressing the on/Standby (EV3) / Send (EVD) button, the information related to this alarm will flash in sequence (see previous paragraph). Pressing the UP button reaches alarms with higher index (older), pressing the Down button reaches alarms with lower index (more recent).

The cLS sub-menu allows the deletion of the history if the level of password entered is sufficiently high. Accessing the sub-menu and pressing the UP button will display the written "donE", which will confirm the cancellation of the history.

6.6.5.1 Menu visibility

The visibility level of all menus is modifiable via serial port analogously to that of the parameters, for example, using the EVCO Parameters Manager parameter configuration tool downloadable free of charge from the EVCO www.evco.it site. It becomes easy to customize the display not only of the parameters, but also of the entire menus for easier navigation by users.

6.6.5.2 Selecting operating modes

Based on the configuration of the dedicated parameters, the controller provides for the possibility of heating and cooling management. There are three possibilities for selecting the operating mode:

- Digital input

- From keyboard/supervisor.

If a digital input has been configured as operating modes, then it is the status of this input that determines the mode of operation.

If switching modes from digital input is active, any attempt to modify keyboard mode will not work and there will be no explanation. If a dedicated digital input is not configured, the operating mode is defined from the keyboard: at each long press of the Down key the operating mode ...-> COOL -> HEAT will be modified. In this situation it is possible to force the supervisory operating mode (State S05).

6.7 Setting up a device

The following paragraphs list all possible configurations of EV3 CHIL/HP and EVD CHIL/HP. The G02 parameter allows you to set a delay in turning on the device: as long as this time is not over, the regulation does not start. This time allows the loads to reach regular operation.

6.7.1 Parameters

For each parameter a visibility level will be assigned that is modifiable (only from serial port, using for example the free EVCO tool for managing the parameters "Parameters Manager") with 4 possible values (the value set to visibility modifies the level of password to be inserted to be able to access the relative parameter from keyboard):

0 = hidden (H)

1 = User (U)

2 = Service (S)

3 = Manufacturer (M)

Label	Chiller default value	Heat pump default value	Chiller default visibility	Heat pump default visibility	Min	Max	Measure unit	Description
setup								**setpoint**
Coo	**8.5**	**8.5**	**U**	**U**	**r07**	**r05**	**°c,°f, Bar,psi* 10**	**Setpoint cooling mode**
HEA	40.0	40.0	H	U	r08	r06	°c,°f, Bar,psi* 10	Setpoint heating mode
dhU	**50.0**	**50.0**	**H**	**U**	**r08**	**r06**	**°c,°f**	**Setpoint ACS mood**
HGb	10.0	10.0	U	H	-58.0	99.9	°c,°f	Set point hot gas bypass

PG								Generals
G01	0	0	H	H	0	255		Reserved
G02	**5**	**5**	**H**	**H**	**5**	**255**	**S**	**Regulation activation delay from Power ON**
G03	1	1	S	S	1	247		ModBus direction
G04	**2**	**2**	**S**	**S**	**0**	**3**		**Baud rate Modbus 0: 2400 1: 4800 2: 9600 3: 19200**
G05	2	2	S	S	0	2		Modbus Equality 0: none 1: Odd 2: EQUALITY
G06	**0**	**0**	**S**	**S**	**0**	**1**		**Stop bits Modbus 0: 1 bit of stop 1: 2 bit of stop**
G07	0	0	S	S	0	1		Measure unity 0: °C/Bar 1: °F/PSI
G08	**3**	**3**	**M**	**M**	**0**	**15**		**Second display 0:hour 1: AI1 2: AI2 3: AI3 4: AI4 5: AI5 6:AI6 (EV3)/AI10(EVD) 7:AI7 (EV3)/AI9(EVD) 8: AI1 EXP 9: AI2 EXP 10: AI3 EXP 11: AI4 EXP 12: AI5 EXP 13: AI10 EXP 14: AI9 EXP 15: Setpoint**
G09	0	0	S	S	0	0		Meaning icon "sun" (☀) 0= heating

								1= cooling
G10	**0**	**0**	**S**	**S**	**0**	**0**		**Clock enable 0 = OFF 1 = ON**
G11	-12	-12	S	S	-127	127		Service password
G12	**123**		**M**		**-127**	**127**		**Manufacturer password**
G13	0	1	H	M	0	1		Enabling heating mode 0: off 1: ON
G14	**1**	**1**	**H**	**M**	**0**	**1**		**Enabling cooling form 0: off 1: ON**
G15	0	0	H	M	0	1		ACS Enablement 0: off 1: ON
G16	**1**	**1**	**M**	**H**	**1**	**2**		**Number of circles**
G17	1	1	M	M	0	6		Number of compressors per circuit 0: for Dry Cooler units /remote capacitor
G18	**0**	**0**	**M**	**M**	**-127**	**127**	**S**	**Operating modes Valve solenoid 0: Based on the evaporation probe. Other negative values: time waits only on on. Other positive values: time of Wait on and off.**
G19	0		M		0	1		Type of ventilation 0: separate 1: unique
G20	**0**		**M**		**0**	**1**		**Enabling expansion 0: Not enabled 1: enabled**

G21	0	1	H	M	0	1		Enabling installation resistors for integration 0: deshabilitadas 1: enabled
G22	**0**	**0**	**H**	**M**	**0**	**1**		**Enabling operation Exclusive boiler and resistors installation 0: Disabled 1: enabled**
G23	0		M		0	1		Dynamic set point enablement 0: Disabled 1: enabledDynamic set point enablement 0: Disabled 1: enabled
G24	**0**	**1**	**H**	**M**	**0**	**1**		**Heat pump shutdown due to low outside temperature 0: Disabled 1: enabled**
G25	0	0	H	M	0	2		Antilegionella mode 0: Disabled 1: enabled 2: Cycle-enabled in Power ON
PA								**Alarms**
A01	3	3	M	M	0	255		Number of events/alarm time LP (bass pressure) to switch from automatic to manual reset. Note: The appliance handles as a single event all events that occur within 225

								seconds (1/16th of an hour) from the first. Valid for all alarms with this management
A02	**120**	**120**	**M**	**M**	**0**	**255**	**S**	**Time "bypass" alarm LP b.pressure**
A03	-10,0	-20,0	M	M	-58,0	99,9	°C;°F;Bar ;psi*10	Setpoint alarma LP
A04	**10,0**	**10,0**	**M**	**M**	**0,0**	**99,9**	**°C;°F;Bar ;psi*10**	**Hysteresis alarm LP**
A05	3	3	M	M	0	255		Number of events/hour of HP alarm (high pressure) to switch from automatic to manual reset.
A06	**55,0**	**55,0**	**M**	**M**	**-58,0**	**99,9**	**°C;°F;bar ;psi*10**	**HP Setpoint AlarmHP Setpoint Alarm**
A07	25,0	25,0	M	M	0,0	99,9	°C;°F;bar ;psi*10	Hysteresis alarm HP
A08	**5**	**5**	**M**	**M**	**0**	**255**		**Number of events per alarm flow hour to move from automatic to manual reset.**
A09	30	30	M	M	0	255	S	Flow alarm bypass time (from ON pump)
A10	**3**	**3**	**M**	**M**	**0**	**255**	**S**	**Flow alarm delay (from flowstat activation)**
A11	5	5	M	M	0	255	S	Reset reset flow alarm (by reset flowstat)
A12	**30**	**30**	**H**	**H**	**0**	**255**	**S**	**Ice alarm bypass time**
A13	3	3	S	S	-58	99	S	Setpoint anti-icing alarm

A14	**2,0**	**2,0**	**S**	**S**	**0,0**	**99,9**	**°C;°F**	**Hysteresis anti-icing alarm**
A15	0	0	M	M	o	1		Freeze fan lock by anti-icing alarm 0= Disabled 1= enabled
A16	99	99	H	M	-58	99	°C;°F	**Setpoint alarm high temperature regulation**
A17	5	5	H	M	0	255	S*10	Delay alarm high temperature regulation
A18	105	105	M	M	50	300	°C;°F	**Setpoint alarm high temperature discharge compressor**
A19	15,0	15,0	M	M	0,0	25,5	°C;°F	Hysteresis alarm high temperature discharge compressor
A20	**0**	**0**	**M**	**M**	**0**	**255**		**Number of events/alarm time Fans to go from automatic to manual reset.**
A21	0	0	M	M	0	255	S	Time "bypass" alarm fans
A22	**0**	**0**	**M**	**M**	**0**	**9.999**	**H*10**	**Maximum limit of fan hours 0 = Disabled**
A23	0	0	M	M	0	9.999	H*10	Maximum compressor hour limit 0 = Disabled
A24	**0**	**0**	**M**	**M**	**0**	**9.999**	**H*10**	**Maximum limit of pump hours 0 = Disabled**
A25	0	0	M	M	0	255		Number of events/hour of compressor thermal alarm to move from automatic to manual reset.

A26	**40**	**40**	**M**	**M**	**0**	**255**	**Hz;%**	**Setpoint oil reset modulating fan**
A27	5	5	M	M	0	255	Min	Delay restoring oil modulating fan
A28	**0**	**0**	**M**	**M**	**-58,0**	**99**	**°C;°F**	**Setpoint disabling heat pump by low outside temperature**
A29	2,0	2,0	M	M	0,0	99,9	°C;°F	Hysteresis disabling heat pump by low outside temperature
M								**I/O**
I01	0	0	M	M	0	4		Regulation probe configuration 0: Probe return temperature 1: Probe drive temperature 2: Probe/Temperature Sensor/Condensing Pressure Circuit1 3: Probe/Temperature Sensor/ Evaporation pressure circuit 1 4: remote mando 0 10V / 4-20mA
I02	**0**	**0**	**M**	**M**	**0**	**3**		**Input type configuration1 0 = NTC/Digital input 1= 4-20mA 2 = 0-10 V 3 = 0-5 V**
I03	0	0	M	M	0	3		Input type configuration2
I04	**0**	**0**	**M**	**M**	**0**	**3**		**Configuration type entry expansion IN1**

I05	0	0	M	M	0	3		Configuration type entry expansion IN2
I06	**102**	**102**	**M**	**M**	**-30**	**120**		**Input function configuration1**
I07	100	100	M	M	-30	120		Input function settings2
I08	**101**	**101**	**M**	**M**	**-30**	**120**		**Input function settings3**
I09	109	109	M	M	-30	120		Input function settings4
I10	**-1**	**106**	**M**	**M**	**-30**	**120**		**Input function settings5**
I11	-2	-1	M	M	-30	120		Configuration function input IN6 (EV3) / IN10 (EVD)
I12	**-5**	**-5**	**M**	**M**	**-30**	**120**		**Configuration function input IN7 (EV3) / IN9 (EVD)**
I13	-7	-7	M	M	-30	30		Input function configuration8
I14	**-17**	**-17**	**M**	**M**	**-30**	**30**		**Configuration function input IN9 (EV3) / IN7 (EVD)**
I15	-19	-19	M	M	-30	30		Configuration function input IN10(EV3)/IN6 (EVD)
I16	**0**	**0**	**M**	**M**	**-30**	**120**		**Configuration IN1 expansion input function**
I17	0	0	M	M	-30	120		Configuration IN2 expansion input function
I18	**0**	**0**	**M**	**M**	**-30**	**120**		**Configuration IN3 expansion input function**
I19	0	0	M	M	-30	120		Configuration IN4 expansion input function
I20	**0**	**0**	**M**	**M**	**-30**	**120**		**Configuration IN5 expansion input function**

I21	0	0	M	M	-30	120		Configuration IN10 expansion input function
I22	**0**	**0**	**M**	**M**	**-30**	**120**		**Configuration IN9 expansion input function**
I23	0	0	M	M	-30	32		Configuration IN8 expansion input function
I24	**0**	**0**	**M**	**M**	**-30**	**30**		**Configuration IN7 expansion input function**
I25	0	0	M	M	-30	30		Configuration IN6 expansion input function
I26	**0,0**	**0,0**	**M**	**M**	**-15,0**	**300,0**	**Bar ; Psi*10; V; mA**	**Home IN1 SCALE[@4 mA/0V] Note: In case the input is configured as "remote control" it is necessary, however, to configure the linearization parameters using the value 0V/4mA for the minimum and 10V/20mA for the maximum.**
I27	50,0	50,0	M	M	-15,0	300,0	Bar ; Psi*10; V; mA	Final SCALE IN1[@20mA/10V]
I28	**0**	**0**	**M**	**M**	**-15,0**	**300,0**	**Bar ; Psi*10; V; mA**	**Home IN2 SCALE[@mA/0V]**
I29	20,0	20,0	M	M	-15,0	300,0	Bar ; Psi*10; V; mA	Final ESCALAEIN2[@mA/0V]

I30	**0,0**	**0,0**	**M**	**M**	**-15,0**	**300,0**	**Bar ; Psi*10; V; mA**	**HOME ESCALE IN1 expansion[@4mA /0V]**
I31	50,0	50,0	M	M	-15,0	300,0	Bar ; Psi*10; V; mA	Fund SCALE IN1 expansion [@20mA/10V]
I32	**0,0**	**0,0**	**M**	**M**	**-15,0**	**300,0**	**Bar ; Psi*10; V; mA**	**HOME ESCALE IN2 expansion[@4mA /0V]**
I33	20,0	20,0	M	M	-15,0	300,0	Bar ; Psi*10; V; mA	Fund ESCALEIN2 expansion [@20mA/10V]
I34	**0,0**	**0,0**	**S**	**S**	**-99,9**	**99,9**	**°C;°F;Bar ; psi*10**	**Offset Analog Input IN1**
I35	0,0	0,0	S	S	-99,9	99,9	°C;°F;Bar ; psi*10	Offset Analog Input IN2
I36	**0,0**	**0,0**	**S**	**S**	**-99,9**	**99,9**	**°C;°F**	**Offset Analog Input IN3**
I37	0,0	0,0	S	S	-99,9	99,9	°C;°F	Offset Analog Input IN4
I38	**0,0**	**0,0**	**S**	**S**	**-99,9**	**99,9**	**°C;°F**	**Offset Analog Input IN5**
I39	0,0	0,0	S	S	-99,9	99,9	°C;°F	Offset Analog Input IN6(EV3)/IN10(EVD)
I40	**0,0**	**0,0**	**S**	**S**	**-99,9**	**99,9**	**°C;°F**	**Offset Analog Input IN7(EV3)/IN9(EVD)**
I41	0,0	0,0	S	S	-99,9	99,9	°C;°F;Bar ; psi*10	Offset Analog input. IN1 expansion
I42	**0,0**	**0,0**	**S**	**S**	**-99,9**	**99,9**	**°C;°F;Bar ; psi*10**	**Offset analog input. expansion IN2**
I43	0,0	0,0	S	S	-99,9	99,9	°C;°F	Offset analog input. expansion IN3

I44	**0,0**	**0,0**	**S**	**S**	**-99,9**	**99,9**	**°C;°F**	**Offset analog input. expansion en4**
I45	0,0	0,0	S	S	-99,9	99,9	°C;°F	Offset analog input. expansion IN5
I46	**0,0**	**0,0**	**S**	**S**	**-99,9**	**99,9**	**°C;°F**	**Offset analog input. expansion IN10**
I47	0,0	0,0	S	S	-99,9	99,9	°C;°F	Offset analog input. expansion IN9
I48	**2**	**2**	**M**	**M**	**0**	**4**		**AO1 output type configuration 0= Disabled 1= Phase cut [%] 2= 0-10 V [%] 3= PWM [%] 4= Frequency [Hz]**
I49	1	1	M	M	0	4		AO2 output type configuration
I50	**0**	**0**	**M**	**M**	**0**	**4**		**Settings. output type AO1 expansion**
I51	0	0	M	M	0	4		Settings. output type AO2 expansion
I52	**100**	**100**	**M**	**M**	**1**	**200**	**Hz*10**	**PWM frequency**
I53	100	100	M	M	1	200	Hz*10	PWM frequency
I54	**1**	**16**	**M**	**M**	**-22**	**22**		**Settings. DO1 digital output function**
I55	12	12	M	M	-22	22		Settings. DO2 digital output function
I56	**2**	**2**	**M**	**M**	**-22**	**22**		**Settings. DO3 digital output function**
I57	3	3	M	M	-22	22		Settings. DO4 digital output function
I58	**0**	**0**	**M**	**M**	**-22**	**22**		**TK1(EV3)/OC(EVD) Digital Output Function Configuration**

I59	0	0	M	M	-22	22		Settings. TK2 digital output function
I60	**0**	**0**	**M**	**M**	**-22**	**22**		**Settings. AO1 digital output function**
I61	0	0	M	M	-22	22		Settings. AO2 digital output function
I62	**0**	**0**	**M**	**M**	**-22**	**22**		**Configuration digital output function expansion DO1**
I63	0	0	M	M	-22	22		Configuration digital output function DO2 expansion
I64	**0**	**0**	**M**	**M**	**-22**	**22**		**Configuration digital output function expansion DO3**
I65	0	0	M	M	-22	22		Configuration digital output function expansion DO4
I66	**0**	**0**	**M**	**M**	**-22**	**22**		**Configuration digital output function AO1 expansion**
I67	0	0	M	M	-22	22		Configuration digital output function AO2 expansion
I68	**0**	**0**	**M**	**M**	**-22**	**22**		**Configuration digital output function OC expansion**
I69	0	0	H	H	-22	22		Reserved
I70	**0**	**0**	**M**	**M**	**0**	**6**		**AO1 output function configuration 0= Disabled (usable as DO)**

								1 = modulating compressor circuit 1 2 = modulating compressor circuit 2 3 = installation pump 4 = Circuit fans 1 5 = Circuit fans 2 6 = Hot gas bypass valve
I71	4	4	M	M	0	6		AO2 output function configuration
I72	**0**	**0**	**M**	**M**	**0**	**6**		**Configuration analog output function expansion AO1**
I73	0	0	M	M	0	6		Configuration analog output function AO2 expansion
I74	**2**	**2**	**M**	**M**	**0**	**4**		**Output function configuration TK1(EV3)/OC(EVD) 0= Disabled (usable as DO) 1 = installation pump 2 = Circuit fans 1 3 = Circuit 2 fans 4 = Hot gas bypass valve**
I75	0	0	M	M	0	4		Configuration TK2 output function
I76	**0**	**0**	**M**	**M**	**0**	**4**		**Configuration analog output function OC expansion**
Pr								**Regulation**
R01	**5,0**	**5,0**	**s**	**S**	**0,0**	**99,9**	**°C-°F-bar-psi*10**	**Regulation band in Cooling mode**

R02	5,0	5,0	H	S	0,0	99,9	°C-°F-bar-psi*10	Regulation band in Heating mode
R03	**5,0**	**5,0**	**H**	**S**	**0,0**	**99,9**	**°C;°F**	**DHW regulation band**
R04	0	0	S	S	0	255	S*10	Full regulation time (PI)
R05	**30,0**	**30,0**	**S**	**S**	**Coo**	**99,9**	**°C-°F-bar-psi*10**	**Maximum setpoint value in mode cooling**
R06	60,0	60,0	H	S	HEA	199,9	°C-°F-bar-psi*10	Maximum setpoint value in mode heating
R07	**4,0**	**4,0**	**S**	**S**	**-58,0**	**Coo**	**°C-°F-bar-psi*10**	**Minimum setpoint value in mode cooling**
R08	20,0	20,0	H	S	0,0	HEA	°C-°F-bar-psi*10	Minimum setpoint value in mode heating
R09	**5,0**	**5,0**	**S**	**S**	**-99,9**	**99,9**	**°C-°F-bar-psi*10**	**Dynamic setpoint offset in mode cooling**
R10	10,0	10,0	H	S	-99,9	99,9	°C-°F-bar-psi*10	Dynamic setpoint offset in mode heating
R11	**30**	**30**	**S**	**S**	**-58**	**99**	**°C-°F-bar-psi*10**	**Temper. Reference exterior Dynamic SetPoint in Mode cooling**
R12	15	15	H	S	-58	99	°C-°F-bar-psi*10	Reference outside temperature Dynamic SetPoint in Mode heating
R13	**10**	**10**	**S**	**S**	**-50,0**	**50,0**	**°C-°F-bar-psi*10**	**Delta outdoor temperature setpoint Dynamic in cooling mode**

R14	-10,0	-10,0	H	S	-50,0	50,0	°C-°F-bar-psi*10	Delta outdoor temperature setpoint Dynamic in heating mode
R15	**-5,0**	**-5,0**	**S**	**S**	**-58,0**	**99,9**	**°C-°F-bar-psi*10**	**Setpoint Low Pressure Valve solenoid**
R16	6,0	6,0	H	S	0,0	99,9	°C-°F	Delta setpoint resistors boiler ACS in integration
R17	**3**	**3**	**H**	**S**	**0**	**255**	**S**	**DHW output bypass time in heating mode**
R18	70,0	70,0	H	S	50,0	199,9	°C-°F	Setpoint antilegionella
R19	**5**	**5**	**H**	**S**	**0**	**255**	**Min**	**Maintenance time antilegionella**
R20	7	7	H	S	1	200	Dias	Antilegionella interval
R21	**1,0**	**1,0**	**s**	**H**	**0,1**	**R22**	**°C-°F**	**Hot Gas Bypass neutra zone**
R22	3,0	3,0	S	H	R21	R23	°C-°F	Smart Band Hot Gas Bypass
R23	**5,0**	**5,0**	**S**	**H**	**R22**	**99,9**	**°C-°F**	**Fast Band Hot Gas Bypass**
R24	50,0	50,0	S	H	0,1	99,9	°C-°F	Proportional band hot gas bypass
R25	**120**	**120**	**S**	**H**	**0**	**999**	**S**	**Bypass Integral time hot gas**
R26	30	30	S	H	0	999	S	derivative time Hot gas bypass
R27	**67**	**67**	**S**	**H**	**1**	**100**	**%**	**fast action Hot Gas Bypass**
R28	90	90	M	H	50	A18	°C; °F	Set point inhibition hot gas bypass function
R29	**15,0**	**15,0**	**M**	**H**	**0,0**	**99**	**°C; °F**	**Hysteresis inhibition hot gas bypass function**
R30	5	5	M	H	0	99,9	S	Delay activation function hot gas diverted from

								compressor ignition
R31	**50**	**50**	**M**	**H**	**0**	**100**	**%**	**Starting position Hot Gas Bypass regulation**
R32	10	10	M	H	1	999	S	Period PWM hot gas bypass valve
R33	**10,0**	**10,0**	**M**	**H**	**1,0**	**10,0**	**V**	**PWM output voltage (AO 0-10V) for hot gas bypass valve piloting**
Pd								**Dercarche**
D01	**0**	**0**	**H**	**M**	**0**	**3**		**Defrost modalities 0: Disabled 1: Pressure/Temperature 2: Compressor Stop 3: Time**
D02	-5,0	-5,0	H	M	-58,0	99,9	°C;°F	Setpoint start defrost count
D03	**20**	**20**	**H**	**M**	**0**	**255**	**Min**	**Defrost activation delay**
D04	15,0	15,0	H	M	-58,0	99,9	°C;°F	End setpoint desescarche
D05	**5**	**5**	**H**	**M**	**0**	**255**	**Min**	**Maximum defrost duration**
D06	60	60	H	M	0	255	S	Waiting time from OFF compressor up to valve switching investment
D07	**6**	**6**	**H**	**M**	**0**	**255**	**S*10**	**Drip time**
D08	-10,0	-10,0	H	M	-58,0	D02	°C;°F	Setpoint forced defrost
D09	**25**	**25**	**H**	**M**	**0**	**255**	**Min**	**2-circuit defrost delay**
D10	3	3	H	M	0	255	S*10	Delay ignition compressors in desescarche
D11	**50,0**	**50,0**	**H**	**M**	**-58,0**	**99,9**	**°C-°F-bar-**	**Setpoint activation fans in**

							psi*10	**desescarche**
D12	10,0	10,0	H	M	0,0	99,9	°C-°F-bar-psi*10	Hysteresis activation of ventilators in desescarche
D13	**30**	**30**	**H**	**M**	**0**	**255**	**Hz-%**	**Speed fans in defrost**
PC								**Compressors**
C01	**0**	**0**	**M**	**M**	**0**	**5**		**Number of compressor partializations**
C02	0	0	M	M	0	2		Compressor typology: 0: ON-off 1: Modulantes 2: Modulante + ON-off
C03	**0**	**0**	**M**	**M**	**0**	**3**		**Compressor rotation modes** **0: hours + saturation** **1: fixed + saturation** **2: hours + balance** **3: Fixed + balance**
C04	24	24	M	M	0	255	S*10	Minimum compressor OFF time; Note: This value was determined to prevent 2 possible LP (low press) alarm events from being considered as a single event
C05	**36**	**36**	**M**	**M**	**0**	**255**	**S*10**	**Minimum time between Activations of the same compressor**
C06	3	3	M	M	0	255	S*10	Minimum time between Different compressor activations

C07	**5**	**5**	**M**	**M**	**0**	**255**	**S**	**Minimum time between shutdown of different compressors**
C08	6	6	M	M	0	255	S*10	Time to minimum on ignition modulating fan
C09	**20**	**20**	**M**	**M**	**10**	**255**	**Hz-%**	**Minimum modulating fan value**
C10	100	100	M	M	10	255	Hz-%	Maximum modulating fan value
Pf								**Fans**
F01	20	20	M	M	0	255	S/10	Fan boot time
F02	**1**	**1**	**M**	**M**	**0**	**10**	**Ms/2**	**Fan defasage**
F03	1	1	M	M	0	1		Fan dependency on compressor status 0: on request 1: Standalone
F04	**3,0**	**3,0**	**M**	**M**	**0,0**	**99,9**	**°C-°F-bar-psi*10**	**Fans control Delta cut-off**
F05	2,0	2,0	M	M	0,0	99,9	°C-°F-bar-psi*10	Hysteresis cut-off control fans
F06	**30**	**30**	**M**	**M**	**0**	**255**	**S**	**Preventilation duration in cooling mode**
F07	20	20	M	M	0	255	S	Post-ventilation duration
F08	**30**	**30**	**M**	**M**	**0**	**100**	**Hz-%**	**Minimum speed fans in cooling mode**
F09	30	30	H	M	0	100	Hz-%	Minimum speed fans in Heating mode
F10	**100**	**100**	**M**	**M**	**0**	**100**	**Hz-%**	**Maximum speed fans in cooling mode**
F11	100	100	H	M	0	100	Hz-%	Maximum fan speed in Heating mode

F12	**100**	**100**	**M**	**M**	**0**	**100**	**Hz-%**	**Maximum speed silent fans and pre and post ventilation speed in cooling mode**
F13	100	100	H	M	0	100	Hz-%	Maximum speed silent fans and speed of pre and post ventilation heating mode
F14	**30,0**	**30,0**	**M**	**M**	**-58,0**	**99,9**	**°C-°F-bar-psi*10**	**Setpoint minimum speed Fans in cooling mode**
F15	9,0	9,0	H	M	-58,0	99,9	°C-°F-bar-psi*10	Setpoint minimum speed Fans heating mode
F16	**57,0**	**57,0**	**M**	**M**	**-58,0**	**99,9**	**°C-°F-bar-psi*10**	**Setpoint maximum speed Fans in cooling mode**
F17	0,0	0,0	H	M	-58,0	99,9	°C-°F-bar-psi*10	Setpoint maximum speed Fans in heating mode
F18	**20,0**	**20,0**	**M**	**M**	**0,0**	**99,9**	**°C-°F-bar-psi*10**	**Proportional band ventilation in cooling mode**
F19	6,0	6,0	H	M	0,0	99,9	°C-°F-bar-psi*10	Proportional band ventilation in Heating mode
F20	**0**	**0**	**M**	**M**	**0**	**1**		**Rotation sequence fans by steps 0: hours. 1: fixed**
PP								**Bomb**
P01	**1**	**1**	**M**	**M**		**0**	**1**	**Pump operating mode 0: Always Active 1: with request for regulation**
P02	20	20	M	M		0	255	Compressor ignition delay

								from pump ignition
P03	**10**	**10**	**M**	**M**		**0**	**255**	**Pump shutdown delay from compressor shutdown**
P04	4	4	S	S	-58,0	99	°C-°F-bar-psi*10	Anti-icing setpoint for activation bomb
P05	**2,0**	**2,0**	**S**	**S**	**0,0**	**99,9**	**°C-°F-bar-psi*10**	**Anti-icing hysteresis for activation bomb**
P06	50		M		0	100	Hz-%	Minimum modulating pump speed
P07	**5**		**M**		**-58**	**99**	**°C-°F-bar-psi*10**	**Modulating bomb setpoint**
P08	3,0		M		0,0	99,9	°C-°F-bar-psi*10	Modulating pump regulation band
PH								**Electric heating elements**
H01	4	4	H	S	H04	H03	°C;°F	Setpoint boiler resistors for anti-icing
H02	**6**	**6**	**H**	**S**	**H04**	**H03**	**°C;°F**	**Setpoint resistors installation for anti-icing**
H03	10	10	M	M	H04	127	°C;°F	Maximum value setpoint boiler resistors/anti-icing system
H04	**-10**	**-10**	**M**	**M**	**-58**	**H03**	**°C;°F**	**Minimum value setpoint boiler resistors/anti-icing system**
H05	2,0	2,0	H	S	0,0	99,9	°C;°F	Hysteresis boiler resistors/integration system
H06	**180**	**180**	**H**	**M**	**0**	**255**	**S*10**	**Resistance activation delay Boiler/Integration System**

H07	6,0	6,0	H	M	0,0	99,9	°C;°F	Differential Setpoint Resistors Integration System
PS								**Solar panels**
S01	5,0	5,0	H	S	0,0	99,9	°C; °F	Setpoint solar panels
S02	**2,0**	**2,0**	**H**	**S**	**0,0**	**99,9**	**°C; °F**	**Hysteresis solar panels**
S03	100	100	H	M	0	255	°C; °F	Over-temperature setpoint collector
S04	**0**	**0**	**H**	**M**	**0**	**255**	**S**	**Time ON pump in envelope-Collecting temperature**
S05	10	10	H	M	0	255	S	OFF time pump in envelope-Collecting temperature
S06	**30**	**30**	**H**	**M**	**-58,0**	**99**	**°C; °F**	**Anti-icing setpoint solar panels**
S07	10,0	10,0	H	N	0,0	99,9	°C; °F	Anti-icing hysteresis solar panels
S08	**60,0**	**60,0**	**H**	**S**	**dhu**	**R06**	**°C; °F**	**Setpoint ACS solar**
S09	70	70	H	S	0	99	°C; °F	Over-temperature setpoint ACS
S10	**10,0**	**10,0**	**H**	**S**	**0,0**	**99,9**	**°C; °F**	**Hysteresis over-temperature ACS**
S11	60	60	H	S	0	255	S	Movement time valve 3 ways ACS

6.7.2 Alarms

All alarms will run to automatic reset, except:

- Anti-icing alarm: manual reset

- High pressure alarm: manual reset if the event number / hour exceeds the value of parameter A05

- Relay alarm Phase sequence: manual reset

- Thermal alarm compressors: manual reset if the number of events / hour exceeds the value of parameter A25

- Low pressure alarm: manual reset if the number of events/hour exceeds the value of parameter A01

- Flow alarm: manual reset if the number of events/hour exceeds the value of parameter A08

- Circuit fan alarm: manual reset if the number of events/hour exceeds the value of parameter A20

Alarm events that occur within 225 seconds (1/16 hour) from the first of them are integrated into the first, in the count of the number of events / now. The reset of manual reset alerts is carried out by turning the unit off and on again.

CODE	DESCRIPTION
AFLo	**Flow alarm** **The alarm is activated when the input set to Flowstate remains active for a time equal to A10, with a delay of A09 from the ignition of the pump; stops when the input is not active for a time equal to A11.** **The alarm becomes manual reset if the number of events/hour exceeds the value of parameter A08.** **Main consequences:** **- All compressors, fans, installation resistors and pump will be turned off immediately. The pump reactivates after exceeding the time of 225 seconds that determines the minimum interval for counting independent alarm events.**
AHTR	**HIGH TEMPERATURE ALARM** **THE ALARM IS TRIGGERED WHEN THE TEMPERATURE VALUE OF THE INLET WATER EXCEEDS A16 FOR A TIME HIGHER THAN A17; STOPS WHEN THE TEMPERATURE VALUE IS BELOW A16-A14.** **MAIN CONSEQUENCES:** **- ALL COMPRESSORS WILL SHUT DOWN**
AbHp	**Heat pump lock** **If one of the probes is set as external temperature, the function is enabled (G24 = 1), the boiler is not on alert and the outside temperature is below A28 then the heat pump is blocked. Reactivation occurs if the outside temperature becomes higher than A28+A29.**

	Main consequences: **- All compressors and fans will shut down**
APH	**RELAY ALARM PHASE SEQUENCE** **THE ALARM IS TRIGGERED IF THE INPUT CONFIGURED AS PHASE SEQUENCE RELAY INPUT IS ACTIVE; STOPS IF THE ENTRY IS NOT ACTIVE.** **THE REARMAMENT OF THIS ALARM IS MANUAL.** **MAIN CONSEQUENCES:** **- ALL LOADS ARE TURNED OFF**
ArEb	**Thermal alarm boiler resistance** **The alarm is activated if the input configured as thermal input resistance boiler is active; Stops if the entry is not active.** **Main consequences:** **- The boiler will turn off**
APMP	**THERMAL PUMP ALARM** **THE ALARM IS ACTIVATED IF THE INPUT CONFIGURED AS THERMAL PUMP INPUT IS ACTIVE; STOPS IF THE ENTRY IS NOT ACTIVE.** **MAIN CONSEQUENCES:** **- ALL COMPRESSORS, FANS, INSTALLATION RESISTORS AND PUMP WILL BE TURNED OFF.**
UArn	**Generic signage** **The alarm is triggered if the input set as generic signaling input is active; Stops if the entry is not active.** **Main consequences:** **- Only display signage**
ALL	**GENERIC ALARM** **THE ALARM IS ACTIVATED IF THE INPUT CONFIGURED AS A GENERIC ALERT INPUT IS ACTIVE; IT STOPS IF THE INPUT IS NOT ACTIVE.** **MAIN CONSECUENCES:** **- ALL LOADS ARE SHUT OFF**
ACnF	**Alarm configuration** **Triggered if at least one of the following statements is correct:** **1. More than 6 power outputs have been configured (number of compressors and number of partializations)** **2. A digital output has been configured as Thermostat step 1, but not compressors of type only On-Off** **3. It has been configured as a regulation probe for the return probe, but the relative analog input has not** **has been configured** **1. It has been configured as a regulation probe for the impulsion probe, but the relative analog input does not.** **has been configured** **2. It has been configured as a regulation probe of the condensation probe circuit 1, but the relative input** **Analog has not been configured** **3. It has been configured as a regulation probe of the evaporation probe circuit 1, but the relative input**

	Analog has not been configured 4. The remote control has been configured as a control probe, but the relative analog input has not been configured, or that this entry has been configured as NTC Main consequences: - All loads will be turned off
EA	CUMULATIVE ALARM PROBES INDICATES THAT ONE OF THE PROBES IS UNDER ALARM. UNCONFIGURED ANALOG INPUTS DO NOT CAUSE ALARM. MAIN CONSEQUENCES: - THE REGULATION INVOLVED IS INTERRUPTED
AFr	Anti-icing alarm The alarm is calculated on the minimum temperature recorded by the water probes at the entrance, outlet and toilet: the alarm is activated when the minimum value is less than A13; stops when the value is greater than A13+A14. The alarm is delayed by a time equal to A12 from the ignition of the heating mode. If the alarm occurs with machine in Stand-by, the machine turns on. The rearmament of this alarm is manual. Main consequences: - All compressors and fans will be turned off
ACOM	COMMUNICATION ALARM THE ALARM IS ACTIVATED WHEN COMMUNICATION WITH THE EXPANSION IS MISSING FOR MORE THAN 10 SECONDS. - THE REGULATIONS INVOLVED ARE INTERRUPTED. THE PROBES RELIEVED BY THE EXPANSION APPEAR IN PROBE ERROR, THE DIGITAL INPUTS RELIEVED BY THE EXPANSION ARE AT 0, AS WELL AS THE DETECTION OF THE FREQUENCY IN THE FAST INPUTS; THE ANALOG OUTPUTS AND RELAYS ACTIVATED BY THE EXPANSION ARE SET TO 0.
AHou	Alarm working hours compressors / fans / pump The alarm is triggered when the working hours of a compressor exceed A22, or if the working hours of a fan exceed A23, or the working hours of the pump exceed A24. Main consequences: - Only display signage
AHP1 AHP2	HIGH PRESSURE ALARM CIRCUIT 1/2 THE ALARM IS ACTIVATED BOTH IN SIGNALING OF THE MAXIMUM PRESSURE SWITCH, BOTH WHEN THE MAXIMUM VALUE BETWEEN THE CONDENSATION PROBE AND THAT OF THE EVAPORATION PROBE EXCEEDS THE THRESHOLD DEFINED BY A06. THE ALARM BECOMES MANUAL RESET IF THE NUMBER OF EVENTS/HOUR EXCEEDS THE VALUE OF PARAMETER A05. MAIN CONSEQUENCES: - THE COMPRESSORS OF THE AFFECTED CIRCUIT WILL BE TURNED OFF
ALP1 ALP2	Low pressure alarm circuit 1/2 The alarm is activated both in signaling of the minimum pressure switch, both when the minimum value between that of the condensation probe and that of the evaporation probe drops below the threshold defined by A03. The alarm stops when Both conditions end. The alarm is activated with a delay time A02 from the ignition of the compressor.

	The alarm becomes manual reset if the number of events/hour exceeds the value of parameter A01. Main consequences: - Compressors and fans of the affected circuit will be turned off Note: to avoid that 2 events in LP alarm sequence are considered a single event, the minimum OFF time of CO4 compressors is pre-determined in 240 seconds.
AF1 AF2	ALARM CIRCUIT FANS THE ALARM IS TRIGGERED IF THE INPUT SET AS THERMAL FAN IS ACTIVE. THE ALARM STOPS IF THE INPUT SET TO THERMAL FAN IS NOT ACTIVE. THE ALARM BECOMES MANUAL RESET IF THE NUMBER OF EVENTS/HOUR EXCEEDS THE VALUE OF PARAMETER A20. MAIN CONSEQUENCES: - THE COMPRESSORS AND FANS OF THE AFFECTED CIRCUIT WILL BE TURNED OFF
At1 At2	Thermal alarm circuit compressors 1/2 The alarm is activated if the input configured as thermal circuit compressors 1/2 is active; Stops if the entry is not active. The alarm becomes manual reset if the number of events / hour exceeds the value of parameter A25. Main consequences: - All compressors in the affected circuit will shut down
AD1 AD2	HIGH TEMPERATURE ALARM DISCHARGE CIRCUIT COMPRESSORS 1/2 THE ALARM IS TRIGGERED IF THE VALUE OF THE CONFIGURED PROBE DISCHARGES COMPRESSORS CIRCUIT 1/2 RISES ABOVE THE VALUE OF PARAMETER A18, AND STOPS WHEN IT DROPS BELOW A18 - A19. MAIN CONSEQUENCES: - ALL COMPRESSORS IN THE AFFECTED CIRCUIT WILL SHUT DOWN
AOi1 AOi2	Oil return alarm circuit 1/2 The alarm is triggered if the modulating fan will remain on a lower percentage of A26 for a time greater than A27. The alarm ends only when the power request of this circuit will exceed 90%. Main consequences: - All compressors in the affected circuit will be turned off.
ATC1 ATC2 ATC3 ATC4 ATC5 ATC6	COMPRESSOR THERMAL ALARM THE ALARM IS ACTIVATED IF THE INPUT SET TO THERMAL COMPRESSOR 1/2/3/4/5/6 IS ACTIVE; STOPS IF THE ENTRY IS NOT ACTIVE. THE ALARM BECOMES MANUAL RESET IF THE NUMBER OF EVENTS / HOUR EXCEEDS THE VALUE OF PARAMETER A25. MAIN CONSEQUENCES: - THE COMPRESSOR CONCERNED WILL TURN OFF
AdS1 AdS2 AdS3 AdS4 AdS5 AdS6	High temperature alarm discharge compressor The alarm is triggered if the value of the configured probe discharges compressors 1/2/3/4/5/6 rise above the value of parameter A18, and stops when the value drops below A18 - A19. Main consequences - The compressor concerned will turn off
EA01	PROBE ALARMS

EA02	**THE ALARM IS ACTIVATED IN THE FOLLOWING CASES:**
EA03	**- WHEN A PROBE IS SHORT-CIRCUITED OR INTERRUPTED**
EA04	**- IN CASE OF EXCEEDING THE UPPER OR LOWER LIMIT OF THE VALUES CONFIGURED**
EA05	**FOR A PROBE.**
EA06	**UNCONFIGURED ANALOG INPUTS DO NOT CAUSE ALARM MAIN CONSEQUENCES:**
EA07	**- THE REGULATION INVOLVED IS INTERRUPTED.**
EA08	
EA09	
EA10	
EA11	
EA12	
EA13	
EA14	

7 c.pCO Programmable Controller (CAREL)

7.1 Introduction

c.pCO is a microprocessor-based, programmable electronic controller, featuring a multitasking operating system, compatible with the c.pCO Sistema family of devices, which includes programmable controllers, user terminals, gateways, communication devices and remote management devices. These devices represent a powerful control system that can be easily interfaced with most Building Management Systems (BMS) available on the market. The controller has been developed by CAREL to provide solutions for several applications in air-conditioning, refrigeration and HVAC/R in general. Its flexibility allows for creation of tailor-made control solutions according to customer specifications. Compared to pCO system, the range is enhanced by a new compact controller, and consequently comprises the c.pCOmini (4 DIN module and panel mounting version), featuring 10 universal inputs/outputs and available with built-in driver for single-pole electronic expansion valve, as well as the c.pCO Small, Medium, Large, ExtraLarge models. The number of inputs/outputs can be increased by connecting a c.pCOe expansion board.

Medium size controllers can also feature one or two built-in drivers for electronic expansion valves. The Ultracap module (accessory) can be used as an emergency power supply for valve drivers, so as to ensure total closure of the valves in case of power failures (alternating current).

c.pCO can be connected in an Ethernet LAN to other c.pCO family controllers. Each device in the LAN can exchange digital or analogue variables with all the others, based on the application program used. c.pCO can also be connected via a pLAN (pCO Local Area Network) to the pGD range of terminals.

Each Fieldbus serial port, whether built into the controller or installed via an optional card, can be connected to controlled field devices such as valve and damper actuators and external drivers (e.g. drivers for electronic expansion valves, EVD Evolution).

Each BMS serial port, whether built into the controller or installed via an optional card, can be connected to field-level, automation-level or management-level standard bus systems, such as Konnex®, LON®, BACnet™, etc.

The real-time operating system (OS) manages priorities so as to ensure the application program cycle time, 32-bit data and floating point numbers, and the Ethernet multimaster and multi-protocol connection.

Main features:

• optimization of the memory occupied by the Operating System and the application program, of the boot time, of the time for loading the application program and of the cycle time;

• system response time optimization: the controller executes several processes in parallel, each managed with a different priority;

• independent processes: each process, whether a protocol, USB port management, data and alarm log (datalogger), data exchange with tERA cloud service, works independently of the others;

• runtime debug (on target)

• native management of TCP/IP multitasking protocol

Local connectivity:

• built-in web server, completely customizable, supports standard HTML and JavaScript. The 90 Mbyte memory can be used to store pages created using the most common website development tools. Dynamic methods (CGI, Common Gateway Interface) are available to read and write the application program variables. Other innovative functions include: the possibility to display the contents of the pGD1 terminal in the browser, display graphs of data recorded by the datalogger and plot data from probes and energy meters in real time (variable trends);

• file server (FTP): the c.pCO public file system can be accessed in the local network via FTP. Consequently, an FTP client can be used to connect to the controller so as to upload updates, web pages and documents. The ".csv" (comma separated value) files exported by the datalogger can be downloaded

• creation of accounts with different access privileges, associated to both a webserver and an FTP server;

• management of multiple simultaneous instances of Modbus TCP/IP Master and Slave protocol;

• management of BACnet™ protocol with B-BC profile (MSTP or TCP/IP, license to be purchased separately).

Remote connectivity:

• integrated connectivity to the Carel tERA cloud service: by connecting a normal router to the controller, a secure connection can be established to the tERA server. Remote services can be activated for the management of control variables, alarm notification, data analysis and reports. The

Connections are encrypted using the SSL (Secure Socket Layer) standard, in compliance with NIST, international reference for information security over the internet.

• a firewall guarantees remote access only via a secure connection (tERA cloud connection or encrypted VPN)

Integrated USB peripheral: it can be used to update the controller and save web pages, documents and applications in the flash memory. Also used to download the logs from the controller.

• c.pCO Small...Extralarge: the host and device USB ports are managed directly by the operating system. USB host (top): a USB flash drive can be used to load updates (operating system/application program) on the controller. USB device port (bottom): by connecting c.pCO to a personal computer, its memory is made available as a removable drive, and at the same time a communication channel is established with the c.suite software for programming and online debugging.

• c.pCOmini: the 2 USB ports are physically integrated into a single micro USB port; the same performance is available as for the two ports on the larger models.

Other features:

• the same controller can be connected to up to 3 pGD1/pGDE terminals;
• external or built-in terminal with display and keypad with LED backlit buttons, can be used for uploading software and commissioning;
• universal inputs/outputs configurable via an application program, for connecting active

and passive probes, digital inputs, analogue and PWM outputs. This extends the possibilities of configuring inputs/outputs without having to install a larger controller;

• possibility to use the c.suite software development environment, installable on a personal computer, for creating and customizing the application program, simulating operation, supervising performance and configuring the Ethernet network;

• wide range of models that differ in terms of:

• size (mini, Small, Medium, Large and Extralarge), to ensure maximum flexibility according to the application;

• digital outputs (24/230 V relay) and SSR (solid state relay);

• NO or NC relay outputs

• integrated optically-isolated/not optically-isolated serial ports;

• optional built-in display;

• various types of connectors (spring, screw, etc.).

Software programming suite, c.suite: designed as a set of independent modules, one for each phase in HVAC/R software development, c.suite allows teams of professionals with different skills to work in a group on the same project, increasing efficiency and adopting joint development based on workflow. All the software modules cooperate with each other based on centralized data exchange, optionally managed by a software version number (SVN):

• c.strategy: environment where expert algorithm programmers prepare the core of the application program. Features of the programming environment:

- total independence of programming logic from the hardware and the connected devices;

- availability of IEC 61131 standard languages: ST (structured text), FBD (function block diagram), SFC (sequential function chart), LD (Ladder diagram), which can also be used simultaneously;

- datatype management: 32-bit, floating point, array and native structures;

- debug on target via USB port or Ethernet;

• c.mask: dedicated environment for developers of the user interface.

• c.design: definition of configurations, such as controller type and size, type of inputs/outputs, master/slave protocols, default values parameter, datalogger, network address and user management, connection to tERA cloud services.

• c.factory: used to program the controller, loading the application program and the appropriate unit configuration during assembly.

Applications

When provided with a dedicated application program, the controller can be used to control different kinds of equipment:

• chillers and heat pumps;

• roof-top units;

• air-conditioners;

• small/medium-sized air handling units (on request);

• refrigerated showcases (on request and to specifications);

• cold rooms (on request and to specifications);

• curing rooms;

• compressor racks;

• universal stage controllers.

7.2 Functional layout

The figure below shows the functional layout of an air handling unit. Damper actuators and valve actuators are field devices that communicate through Fieldbus 1 (ref. C). Fieldbus 2 (ref. E) is the medium through which the serial probes communicate the measured values, and through which the humidifier control board and the fans exchange data and receive set points from the controller. The built-in terminal and the remote terminal, which communicate via pLAN (ref. A), are used for installing the application program and for commissioning the system.

The PGD touchscreen terminal, intuitive and simple to use, can be used while the unit is normally working to set switch-on and switch-off times, to enter the main parameters, to perform other advanced functions of the application program and to view any alarms triggered. In this case data are exchanged via Ethernet port (ref. D). In the same network it is possible to connect another c.pCO controller as well as to communicate with remote cloud service tEra or to BACnet™ supervisor. The system can be connected to other supervision systems (Konnex®, LON®, etc.) after installing the relative BMS1 expansion card (ref. B).

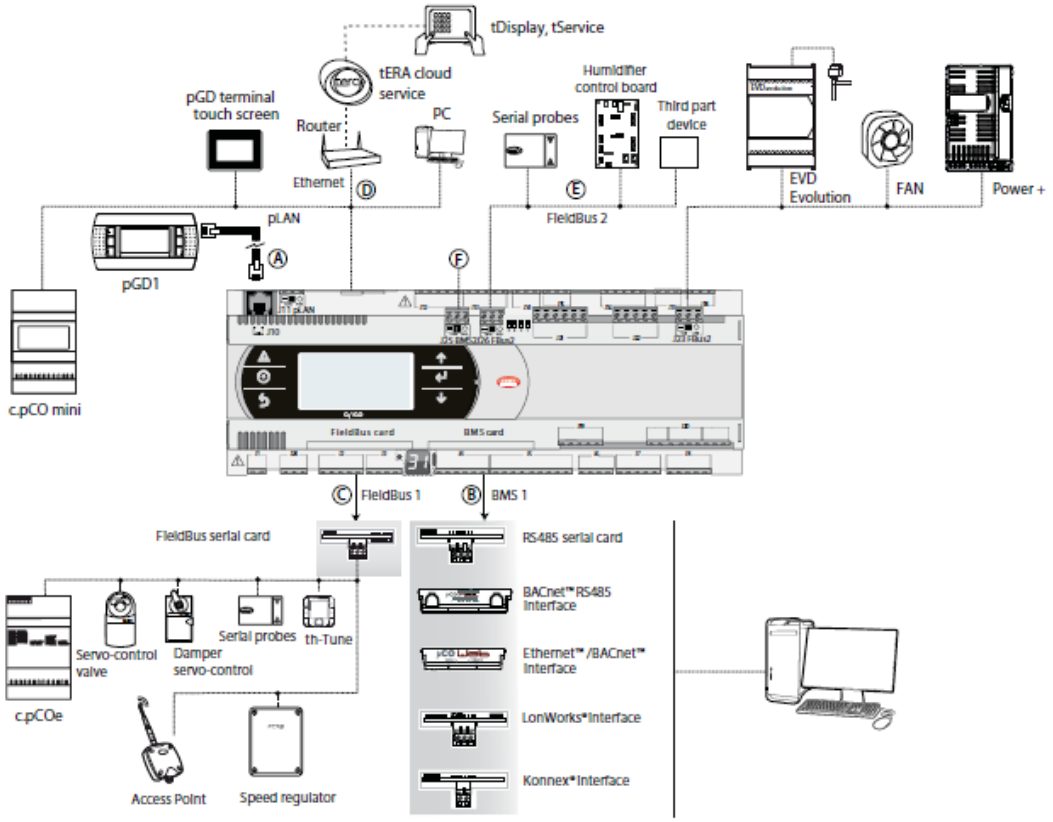

Fig. 1.a

Ref.	Serial port/Connectors	Connection to:
A	pLAN/J10, J11	up to 3 terminals (e.g. pGD1, pLDPRO)
B	BMS 1 Serial Card	a building automation system, after installing the special BMS card (see par. 1.3)
C	FieldBus 1 Serial Card	sensors, actuators, etc., on a Fieldbus, after installing the special card (see par. 1.4)
D	Ethernet	pGD Touch terminals, c.pCO controllers, Router-->tERA
E	FieldBus 2 / J26 (e J23 in Large, Extralarge models)	sensors, actuators, etc., on a Fieldbus (built-in card)
F	BMS 2 / J25	other devices (built-in card)

7.3 USER INTERFASE

7.3.1 Terminal pGD1

The OSSTDmCHBE user interface is the pGD1 terminal in the wall versions, built-in or mounted directly in the pCO5+, thus "built-in".

The terminal, which is shown in the figure above, has 6 buttons whose meanings are described below:

- Alarm	Display the list of active alarms Manually reset alarms
- Prg	Access the main menu
- Esc	Return to the previous screen
Up - Down	Navigate between the display screens or increase/decrease the value.
- Enter	Switch from parameter display to edit Confirm value and return to the paramete

7.3.2 Display

The following screen displays an example of the main screen on an active unit, highlighting the fields and icons used:

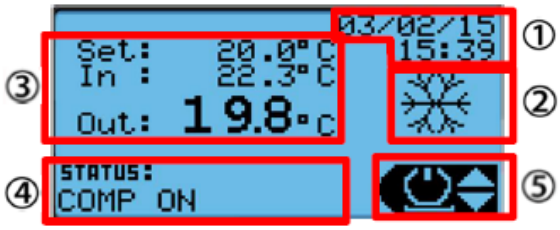

1. Date and Time
2. Current unit status:

	Summer mode (chiller)
	Winter mode (heat pump)
	Defrosting in progress (all circuits)
	Defrosting in progress (only one circuit)
	Full free cooling
	Partial free cooling

3. Control probes, setpoint and reference probe
4. Status of the unit:
   - **STAND BY;**
   - **OFF BY ALARM;**
   - **OFF BY BMS;**
   - **OFF BY SCHED;**
   - **OFF BY DI;**
   - **OFF BY KEYBOARD;**
   - **OFF BY CHG-OVER ;**
   - **FREECOOLING;**
   - **COMP ON;**
   - **DEFROST;**
   - **SHUTTING DOWN.**
5. Indicates access to the user menu using the UP, DOWN and ENTER keys to confirm

7.3.3 User Menu

On the main screen, the UP and DOWN buttons can be used to scroll through the functions and ENTER used to select them. No password is needed to access and edit these parameters.

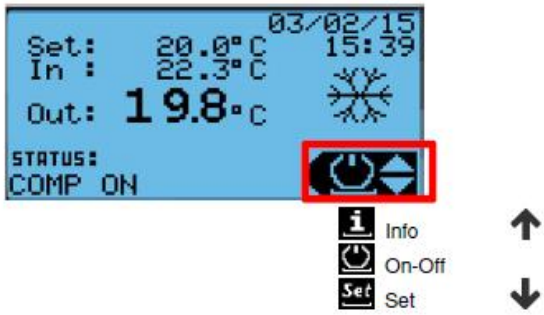

7.3.3.1 Synoptics

The general synoptics of the unit can be shown from the user menu. The physical status of the inputs, device outputs and probes are available in a menu connected to the synoptics. If an input or output is not enabled, its screen does not appear.

The individual screens of the synoptics are shown below.

Circuit synoptic

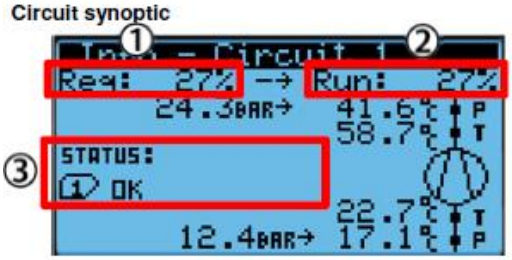

1. Circuit request for thermoregulation
2. Status of the request processed
3. Envelope zone:
   - **1 Ok**: zone within operating limits
   - **2 HiDP**: High compression ratio
   - **3 HiDscgP**: High condensing pressure
   - **4 HiCurr**: High motor current
   - **5 HiSuctP**: High suction pressure
   - **6 LoPRat**: Low compression ratio
   - **7 LoDP**: Low differential pressure
   - **8 LoDscgP**: Low condensing pressure
   - **9 LoSuctP**: Low suction pressure

Compressor synoptic

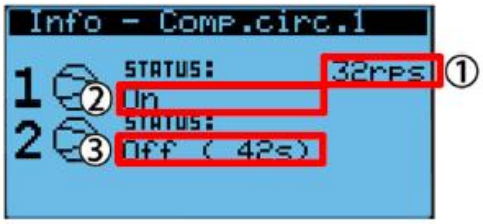

1. Current compressor speed (BLDC only)
2. Status of compressor 1:
3. Status of compressor 2:
   - **Off (...s)**: off, indicating, if necessary, the remaining time before restarting;
   - **On (...s)**: on, indicating, if necessary, the remaining time before switching off;
   - **Man On**: on manually;
   - **Man Off**: off manually;
   - **Frcd Off**: forced off by EVD driver (not yet ready for control);
   - **Defr**: on for defrost cycle;
   - **PmpD**: pump-down in progress;
   - **Alrm**: off due to alarm.

Condenser fan synoptic

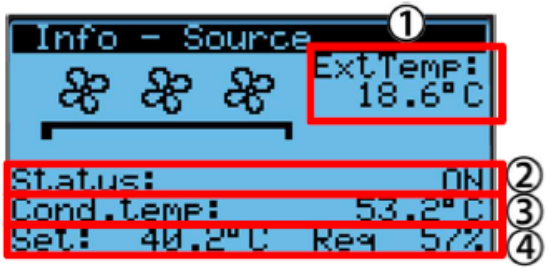

1. External temperature conditions (if any);
2. Ventilation status:
   - **Off;**
   - **On**
   - **Speed Up**
   - **Forced by defrost**
   - **Forced by prevent**
   - **Anti frost**
   - **Freecooling**
   - **Manual**
   - **Defrost**
3. Current condensing saturated temperature value;
4. Control set points and percentage request (the percentage is shown with modulating fans only)

Defrost synoptic

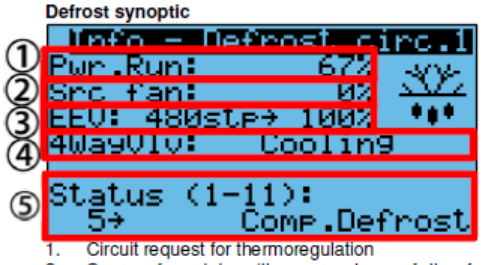

1. Circuit request for thermoregulation
2. Source fan status (the percentage of the fan request is present only in case of modulating fans).
3. EEV position (in step and opening percentage)
4. 4 way valve status
5. Defrost status and description.

ExV synoptic

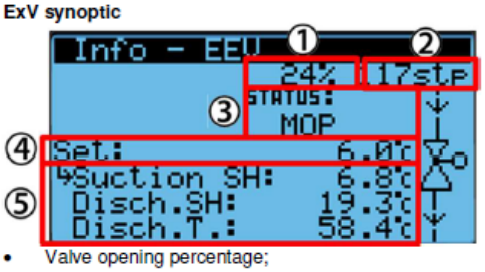

- Valve opening percentage;
- Discharge superheat;
- Valve status:
  - **Init**: driver initialization.
  - **Close**: valve closed;
  - **Off**: valve in standby;
  - **Pos**: valve in positioning;
  - **Wait**: valve in activation;
  - **On**: valve in control;
  - **LoSH**: Low SH function running;
  - **LOP**: LOP function running;
  - **MOP**: LOP function running;
  - **HiTc**: HiTc function running;
- Valve steps;
- Regulation values:
  - Suction superheat
  - Discharge superheat;
  - Discharge temperature;

  the arrow indicates the reference value for the set point (i.e. what control is based on - suction SH, in the figure).

Plant synoptic

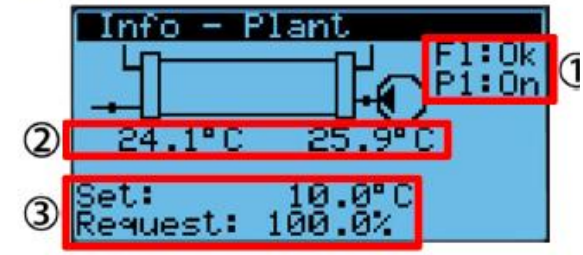

1. Pump and flow switch status
2. Input and output water temperature;
3. Control set points and unit percentage request

7.3.3.2 On/Off

The unit can be turned on and off from the user menu (using the parameter with code Q000) and the status can be displayed.

The On status requires the following consensus:

· digital input (if enabled)

· keyboard from the On-Off menu

· time bands (if enabled)

· BMS (if enabled)

Before switching from On to Off, OSSTDmCHBE goes through the transient shutting down status where the controller shuts down the compressors following the shutdown procedure and then shuts down pumps and fans.

Note: In case of a BMS offline error, the unit will ignore the BMS request and regulates as usual.

7.3.3.3 Set

In this menu the current set points in chiller mode (parameter code Q001) and heat pump mode (parameter code Q002) can be displayed and edited.

The user cannot set the set points outside of the minimum and maximum values set in the Plant menu.

If the summer/winter change by keyboard is enabled, the unit operating mode (parameter code Q003) can also be changed in this menu.

Following a mode change, the unit will remain off with the pump on for a period of time (code A024) that can be set from the Plant menu to reduce working mode temperature difference in the evaporator and make the compressor restarting less problematic.

Otherwise it will have a high thermal load.

7.3.4 MENU DESCRIPTION

Regardless of the displayed screen, pressing the programming key accesses the password entry screen which allows access to the main menu shown below.

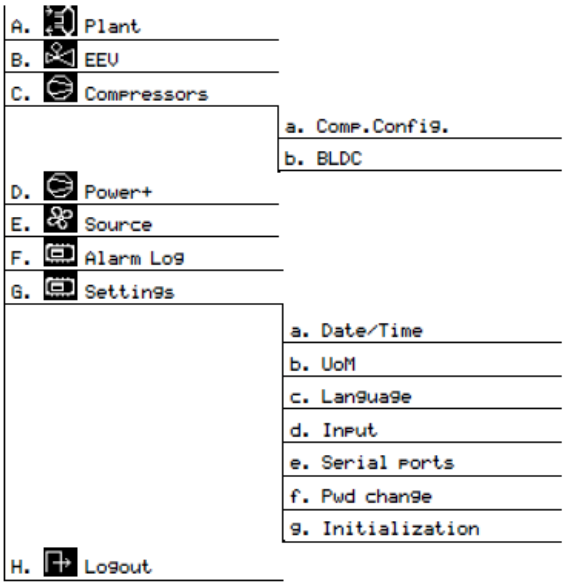

7.3.4.1 Password Management

The program has 3 different password levels:

1. Advanced user (maintenance): read only access to all parameters. Default password: 1234.

2. Service: read access to all parameters with the ability to edit some of them (for more information on the parameters that can be changed, see the parameters table). Default password: 1234.

3. Manufacturer: read/write access to all parameters. Default password: 1234.

In the parameters screen, the access needed to edit the parameters is shown, always with the same codes. An example follows.

Once the password is entered it will be maintained for 5 minutes from the last time a key was pressed and then the password will need to be re-entered in order to access the parameters of the advanced functions. In the Log-Out menu, the password can be force entered without waiting 5 minutes.

7.3.4.2 Screen loops and layout

In each menu, the screens are organized into loops: the up and down buttons scroll all the screens in the same menu. The screens are organized so that the down button (scrolling downwards) accesses the most frequent screens, while those that are used least (e.g. configuration) are accessed by pressing the up button (scrolling upwards).

Parameter code

OSSTDmCHBE has a code for each individual parameter to clearly identify them. Only the parameters are coded and thus the values that can be accessed in read/write mode that characterize how the unit operates. The read only values are not coded. Each parameter has a 4 digit code identified as follows:

1st digit	2nd digit	3rd	4th
Main menu code	Secondary menu code	Parameter code	

7.3.5 Quick configuration

For quick plant configuration, proceed as follows (access to configuration screens with scrolling up - button up).

Menu A. Plant

Plant has all of the parameters for the evaporator and thus the unit load.

1. Unit type (Chiller/Heat pump- parameter code A065)
2. Pump number (parameter code A064)

Menu B. EEV

ExV has all of the parameters for the electronic expansion valve.

1. ExV Type (parameter code B050)
2. Pump-down configuration (parameter code B036)

Menu C. Compressors

Config. Compressors has all of the compressor parameters.

1. Circuit number (parameter code Ca69)
2. Circuit configuration (parameter code Ca70)
3. Compressor manufacturer & model (par.s Ca67-68)
4. Power distribution% between compressors (par. Ca64-66)
5. Refrigerant (parameter code Ca63)
6. Optional functions
7. Probe configuration

Menu D. Power+

Power+ comprises all the parameters that concern the compressor inverter.
- Type of BLDC motor (compressor) (parameter code D061)

Menu E Source

Source has all of the parameters for the unit condensation.
1. AW or WW unit type (parameter code E071)
2. Type of pumps (on-off/inverter) with WW unit (par. E069)
3. Pump number with WW unit (parameter code E068)

Menu F. Alarm log

Alarm log accesses the functions for downloading the alarm log, to internal memory or USB memory.

Menu G. Settings

Settings comprise all the parameters concerning:
a. time-date setting;
b. unit of measure shown on the display;
c. menu language selection;
d. I/O configuration;
e. c.pCO serial port configuration;
F. password setting;
g. delete alarm log, reset automatic alarm counters with limit on the number of events over a certain period, enable alarm buzzer, export and import the parameters, download one or all of the historical logs or a specified time interval log.

Menu H. Log-Out

Log-Out can be used to exit the set password.

7.3.6 pGDX – Display Touch Screen

The same PGD1 user interface is available with a graphic appearance on the pGDx touch screen display. The terminal consists of a touch display and a colored LED notification bar. The color of the LED is linked to the unit status:

Off	Unit off
White	Unit in standby
Red	Blocker unit alarm present

Note: only blocker alarms will be notified through the network status LED.

The user interface respects a basic rule, the clickable areas are identified by white icons or white texts.

Below are some examples of the main screens:

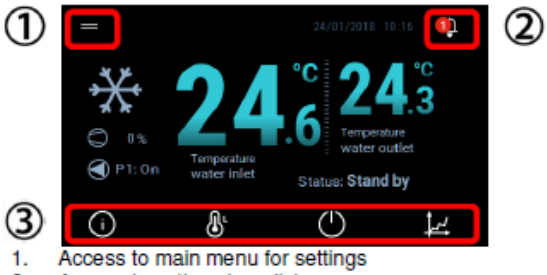

1. Access to main menu for settings
2. Access to active alarm list
3. User menu: info, on/off, setpoint e trend.

The user menu is accessible without using a password and

contains the main states of the unit and the connected devices, the on / off menu, setpoint change and the possibility to display the graphs.

Below is an example of two info menu screens:

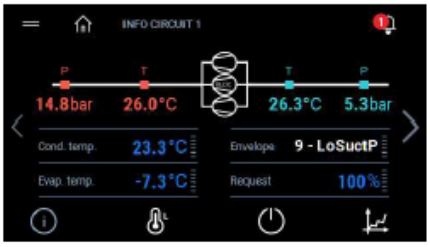

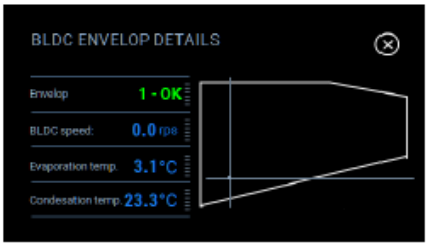

The parameters, accessible from the programming menu, are all available through a special scrolling list and password protected.

Below the menu screen and a list of parameters.

If it is necessary to access the controller system menu, it is possible to use a native emulation function of the PGD1, then execute the commands as described on c.PCOsystem manual.

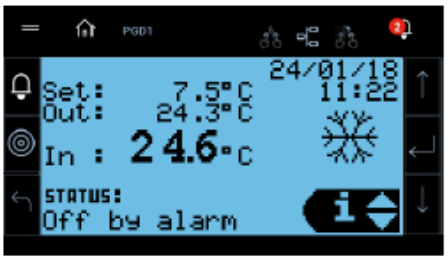

7.3.7 Web commissioning tool

Via internet browser, inserting the IP address of the c.pCO, it will be possible to access the "DC compressor chiller" application In order to see and edit service parameters of an OSSTDmCHBE application.

Note: the application is English language only and designed

for usage by computer and physical keyboard.

Note: suggested resolution fullscreen 1920px*1080px.

Note: supported on the following browsers: Firefox, Chrome, Opera(?).

The application is divided in:

Main: in which are shown the main status parameter of the unit

Synoptic:

· Unit: main unit parameters, according to the circuit number. webPGD and Unit live trend available.

· Circuit 1: main circuit parameters (compressors status, ExV status, Source status). ExV and Source live trend available.

· Circuit 2: main circuit parameters (compressors status, ExV status, Source status). ExV and Source live trend available. If Circuit 2 is enabled.

Parameters: it is necessary to be logged-in to open the Parameter menu. It is necessary to be, at least, Service user to be able to edit all the parameters.

· Plant: all the Plant service parameters.
· ExV: all the ExV service parameter.
· Compressors: all the Compressor service parameter.
· Power+: all the Power+ service parameter, if Power+ device enabled.
· Source: all the Source service parameter.

Alarms List: alarms list, with start and end period of the alarm.

Info:

· Manual: OSSTDmCHBE user manual (pdf version).

· About: tool and application information, with a little guide about menu and login buttons.

7.3.8 Functions

7.3.8.1 webPGD

It is possible to see and interact with the PGD1 user interface:

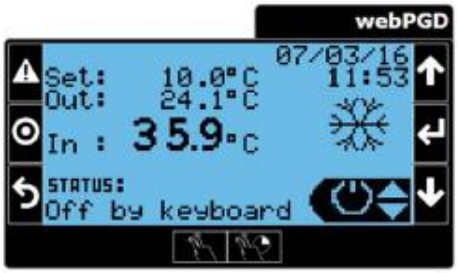

Note: See "5.1 Terminal pGD1" chapter for more information.

7.3.8.2 Trend

Live trends of selected variables are shown according to the unit configuration:

· Unit trend:

- "User water inlet temperature";
- "User water outlet temperature";
- "Power request in %";
- "Current setpoint";
- "Freecooling request" (if free-cooling function is enabled).

· Circuit 1/2 ExV trend:

- "ExV setpoint circ. n";
- "Suction SH circ. n";
- "Suction temperature circ. n";
- "Suction pressure circ. n";
- "Discharge SH circ. n";
- "Discharge temperature circuit n".

· Circuit 1/2 Source trend:

- "Source setpoint circ. n";
- "Source water inlet temperature";
- "Cond. temperature circuit n";
- "Evaporating temperature circ. n";
- "Discharge pressure circ. n".

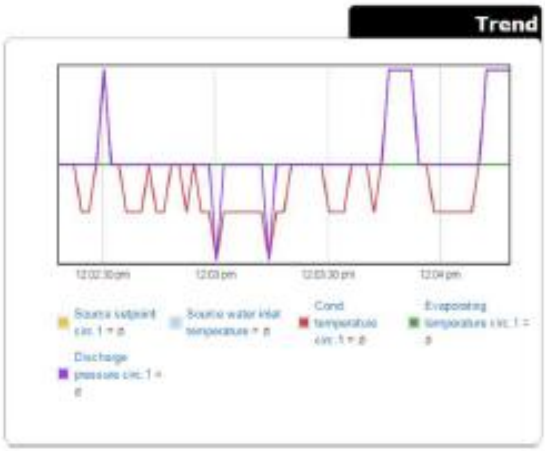

7.3.8.3 Compressorr Envelope

According to the compressor type selected, in the circuit page it is possible to see the working point of the compressor according to its envelope polygon.

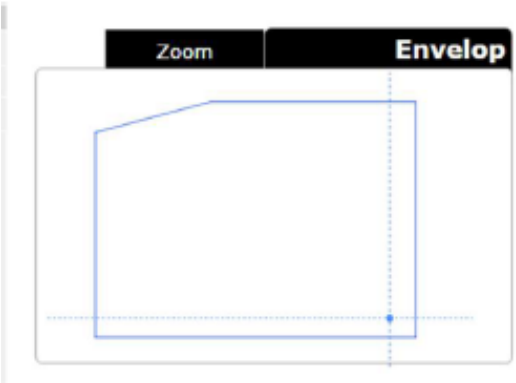

With the zoom command the labels of the working point, polygon vertices and compressor model selected are shown.

7.3.8.4 Unit of measure

It is possible to change the unit of measure, of the visualized variables, with the dedicated combobox.

The supported unit of measure are: NC, SI(°C,kPA), USA(°F,psi), UK(°C,bar), CAN(°C,psi), LON, SI(°C,bar).

Note: See "5.7.8 Parameters" chapter for more information.

7.3.8.5 Alarm List

Alarms list table in which the following fields are shown:

Start: when the alarm is triggered

End: when the alarm has been reset

Code: alarm code

Description: alarm description

If the alarm row is red, it means that the alarm is active at this moment, while a white row means that the alarm is not active.

With the button "RESET ALARMS" it is possible to send a reset alarms to the c.pCO.

Note: See "9 Alarms" chapter for more information.

7.3.8.6 Remote On/Off and remote power request

If parameters Ge16 is enabled the c.pCO application will also check the Remote On/Off switch available in the Main and Unit page If parameters Ge17 are enabled it is possible to use the Remote Power request variable to set the power request of the unit.

Note: See "7. Parameters table" chapter for more information.

7.3.8.7 Login

In order to login as one of the available users (Maintenance,

Service or Manufacturer), it is necessary to press:

· on Login area
· on Parameter button

The login popup will appear

If the password is correct, according to the ones stored in the c.pCO application, the right user will be logged in. While, if the password is wrong, there will be a notification in the popup window as well.

The logged user will maintain the session active for 10 minutes, which is renewed every time a page is changed. After 10 minutes of inactivity the user will be automatically logged out, and the main page will be reloaded.

It is possible to do the logout by pressing on the user button:

7.3.8.8 Parameters

It is possible to edit the parameters that are shown with blue color, while black parameters are not editable.

Examples:

· Logged in as Maintenance user:

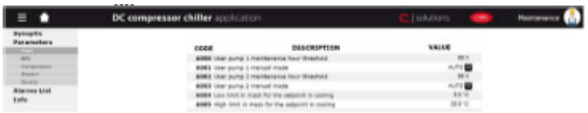

· Logged in as Manufacturer user:

<u>How to edit a parameter</u>:

· "Text" parameter: click on the number, edit with the keyboard and then press "Enter" to save the value.

· "Combo-box" parameter: click on the combo-box button and then select one of the voice of the dropdown menu.

· "Switch" parameter: click on the switch button to change the digital variable status.

7.4 PARAMETER TABLE

The following tables show the parameters and values displayed by the terminal.

7.4.1 Set

Param. Code	PWD	Variable Description	Type	Default	UoM	Range	R/W
Q001	U	Q001 - Cooling mode setpoint	Real	7.0	°C	A04…A05	W/R
Q002	U	Q002 - Heating mode setpoint	Real	40.0	°C	A06…A07	W/R
Q003	U	Q003 - Chiller/Heatpump working mode by Keyboard	Bool	0	-	0:Cool; 1:Heat	W/R

7.4.2 Plant

Param. Code	PWD	Variable Description	Type	Default	UoM	Range	R/W
A000	S	A000 - User pump 1 maintenance hour threshold	UDInt	99000	h	0...999999	R/W
A001	S	A001 - User pump 1 manual mode	UInt		-	0: Auto; 1: Off; 2: On	R/W
A002	S	A002 - User pump 2 maintenance hour threshold	UDInt	99000	h	0...999999	R/W
A003	S	A003 - User pump 2 manual mode	UInt		-	0: Auto; 1: Off; 2: On	R/W
A004	S	A004 - Low limit in mask for the setpoint in cooling	Real	5.0	°C/°F	-99.9...999.9	R/W
A005	S	A005 - High limit in mask for the setpoint in cooling	Real	20.0	°C/°F	A04...999.9	R/W
A006	S	A006 - Low limit in mask for the setpoint in heating	Real	30.0	°C/°F	0.0...999.9	R/W
A007	S	A007 - High limit in mask for the setpoint in heating	Real	45.0	°C/°F	A006...999.9	R/W
A008	S	A008 - Starting temp. point for setpoint compensation (CH)	Real	25.0	°C/°F	-50.0...A009	R/W
A009	S	A009 - Ending temp. point for setpoint compensation (CH)	Real	35.0	°C/°F	A008...200.0	R/W
A010	S	A010 - Max temp. differential for setpoint compensation (CH)	Real	5.0	°C/°F	0.0...99.9	R/W
A011	S	A011 - Starting temp. point for setpoint compensation (HP)	Real	5.0	°C/°F	A009...999.9	R/W
A012	S	A012 - Ending temp. point for setpoint compensation (HP)	Real	-5.0	°C/°F	-999.9...A08	R/W
A013	S	A013 – Max temp. differential for setpoint compensation (HP)	Real	5.0	°C/°F	0.0...99.9	R/W
A014	S	A014 - Enable scheduling function	Bool	0	-	0: Off; 1: On	R/W
A015	S	A015 - Scheduler start hour time band	Int	20	h	0...23	R/W
A015	S	A015 - Scheduler start minute time band	Int	0	min	0...59	R/W
A016	S	A016 - Scheduler end hour time band	Int	6	h	0...23	R/W
A016	S	A016 - Scheduler end minute time band	Int	0	min	0...59	R/W
A017	S	A017 - Type of scheduling	Bool	0	-	0:Off Unit; 1: En 2° Setpoint	R/W
A018	S	A018 - Second setpoint in cooling	Real	10.0	°C/°F	-999.9...999.9	R/W
A019	S	A019 - Second setpoint in heating	Real	35.0	°C/°F	-999.9...999.9	R/W
A020	S	A020 - High water temperature setpoint offset	Real	10.0	°C/°F	0.0...99.9	R/W
A021	S	A021 - High water temperature startup delay	UDInt	15	min	0...99	R/W
A022	S	A022 - High water temperature run delay	UDInt	180	s	0...999	R/W
A023	S	A023 - Changeover type (0=Keyboard, 1=DIn)	Bool	0	-	0:By keyboard;1:By DIN	R/W
A024	S	A024 - Changeover delay time	UInt	60	min	0...999	R/W
A025	S	A025 - Startup regulation probe (0=Inlet; 1=Outlet)	Bool	0	-	0: Inlet; 1: Outlet	R/W
A026	S	A026 - Delay time between Startup PID and Run PID	Int	180	s	0...999	R/W
A027	S	A027 - Run regulation probe (0=Inlet; 1=Outlet)	Bool	1	-	0: Inlet; 1: Outlet	R/W
A028	S	A028 - Startup PID proportional band	Real	12.0	°C/°F	0.0...999.9	R/W
A029	S	A029 - Startup PID integral time	UInt	180	s	0...999	R/W
A030	S	A030 - Startup PID derivative time	UInt	0	s	0...99	R/W
A031	S	A031 - Run PID proportional band	Real	10.0	°C/°F	0.0...999.9	R/W
A032	S	A032 - Run PID integral time	UInt	120	s	0...999	R/W
A033	S	A033 - Run PID derivative time	UInt	3	s	0...99	R/W
A034	S	A034 - User pump flow alarm startup delay	UInt	10	s	0...999	R/W
A035	S	A035 - User pump flow alarm run delay	UInt	3	s	0...99	R/W
A036	S	A036 - Compressor delay On since the user pump On	UInt	30	s	0...999	R/W
A037	S	A037 - User pump delay Off since the compressor Off	UInt	10	s	0...999	R/W
A038	S	A038 - User pump rotation time	UInt	12	h	0...99	R/W
A039	S	A039 – User antifreeze alarm threshold	Real	-0.8	°C/°F		R/W
A040	S	A040 - User antifreeze alarm differential	Real	30.0	°C/°F	0.0...999.9	R/W
A041	S	A041 - User antifreeze alarm delay at 1K below threshold	UInt	30	s	0...999	R/W
A042	S	A042 - Antifreeze (with unit Off) setpoint	Real	4.0	°C/°F	-999.9...999.9	R/W
A043	S	A043 - Antifreeze (with unit Off) differential	Real	2.0	°C/°F	0.0...99.9	R/W
A044	S	A044 - Water inlet probe user - Probe offset	Real	0.0	°C/°F	-99.9...99.9	R/W
A045	S	A045 - Water outlet probe user - Probe offset	Real	0.0	°C/°F	-99.9...99.9	R/W
A046	S	A046 - Remote alarm input logic (0=NO; 1=NC)	Bool	0	-	0: Alarm if open;1:Alarm if close	R/W
A047	S	A047 - Summer/Winter input logic (0=NO; 1=NC)	Bool	0	-	0: Heat if close;1: Heat if open	R/W
A048	S	A048 - Unit On/Off input logic (0=NO; 1=NC)	Bool	1	-	0: On if open; 1: On if close	R/W
A049	M	A049 - User pump flow input logic (0=NO; 1=NC)	Bool	0	-	0: Alarm if open;1:Alarm if close	R/W
A050	M	A050 - User pump overload input logic (0=NO; 1=NC)	Bool	0	-	0: Alarm if open;1:Alarm if close	R/W
A051	S	A051 - Second setpoint input logic (0=NO; 1=NC)	Bool	1	-	0: On if open; 1: On if close	R/W
A052	M	A052 - User pump 1 output logic (0=NO; 1=NC)	Bool	0	-	0: On if close; 1: On if open	R/W
A053	S	A053 - Global alarm output logic (0=NC; 1=NO)	Bool	1	-	0: Alarm if close; 1: Alarm if open	R/W
A054	M	A054 - Free cooling solenoid valve logic (0=NO; 1=NC)	Bool	0	-	0: On if close; 1: On if open	R/W
A055	M	A055 - Antifreeze heater output logic	Bool	0	-	0: On if close; 1: On if open	R/W
A056	S	A056 - Alarm relay configuration	Bool	1	-	0: Only serious alarm; 1: All alarms	R/W
A057	M	A057 - Delta temp. to activate free-cooling coil regulation	Real	3.0	°C/°F	-99.9...99.9	R/W

A058	M	A058 - Free-Cooling On-Off hysteresis	Real	1.5	°C/°F	-99.9...99.9	R/W
A059	M	A059 - Delta temp.(Water In - Source) for 100% FC capacity	Real	8.0	°C/°F	-99.9...99.9	R/W
A060	M	A060 - Free-cooling type (0=Air; 1=Air remote; 2=Water)	UInt	0	-	0: Air;1: Remote air coil; 2: Water	R/W
A061	S	A061 - Antifreeze type (0=Heater; 1=Pump; 2=Heater-Pump)	USInt	2	-	0: Heater; 1: Pumps;2: Heater & pumps	R/W
A062	S	A062 - Enable setpoint compensation function	Bool	0	-	0: Off; 1: On	R/W
A063	S	A063 - Enable free-cooling function	Bool	0	-	0: Off; 1: On	R/W
A064	M	A064 - User pump number	USInt	1	-	1...2	R/W
A065	M	A065 - Unit type (0=CH; 1=HP; 2=CH/HP)	USInt	0	-	0=CH; 1=HP; 2=CH/HP	R/W
A066	M	A066 Demand limit percentage 0-100%	Real	100.0	%	0.0...100.0	R/W

7.4.3 ExV

Param. Code	PWD	Variable Description	Type	Default	UoM	Range	R/W
B000	S	B000 - ExV circuit 1 enable manual mode	Bool		-	0: Off; 1: On	R/W
B001	S	B001 - ExV circuit 1 manual mode	Int		-	0...9999	R/W
B002	S	B002 - ExV circuit 2 enable manual mode	Bool		-	0: Off; 1: On	R/W
B003	S	B003 - ExV circuit 2 manual mode	Int		-	0...9999	R/W
B004	S	B004 - ExV SH setpoint in cooling	Real	6.0	°C/°F	LowSH...180°C (324°K)	R/W
B005	S	B005 - ExV proportional gain SH regulation in cooling	Real	15.0	-	0.0...800.0	R/W
B006	S	B006 - ExV integral time SH regulation in cooling	Real	150.0	s	0.0...1000.0	R/W
B007	S	B007 - ExV derivative time SH regulation in cooling	Real	1.0	s	0.0...800.0	R/W
B008	S	B008 - ExV SH setpoint in heating	Real	6.0	°C/°F	LowSH...180°C (324°K)	R/W
B009	S	B009 - ExV proportional gain SH regulation in heating	Real	15.0	-	0.0...800.0	R/W
B010	S	B010 - ExV integral time SH regulation in heating	Real	150.0	s	0.0...1000.0	R/W
B011	S	B011 - ExV derivative time SH regulation in heating	Real	1.0	s	0.0...800.0	R/W
B012	S	B012 - ExV low SH threshold in cooling	Real	1.0	°C/°F	-40°C (-72°K)...SH set	R/W
B013	S	B013 - ExV integral time low SH in cooling	Real	10.0	s	0.0...800.0	R/W
B014	S	B014 - ExV low SH threshold in heating	Real	1.0	°C/°F	-40°C (-72°K)...SH set	R/W
B015	S	B015 - ExV integral time low SH in heating	Real	10.0	s	0.0...800.0	R/W
B016	S	B016 - ExV LOP regulation threshold in cooling	Real	-5.0	°C/°F	-60°C (-76°K)...MOP set	R/W
B017	S	B017 - ExV integral time LOP regulation in cooling	Real	5.0	s	0.0...800.0	R/W
B018	S	B018 - ExV LOP regulation threshold in heating	Real	-50.0	°C/°F	-60°C (-76°K)...MOP set	R/W
B019	S	B019 - EEV integral time LOP regulation in heating	Real	5.0	s	0.0...800.0	R/W
B020	S	B020 - ExV MOP regulation threshold in cooling	Real	30.0	°C/°F	LOP Set...200°C (392°K)	R/W
B021	S	B021 - ExV integral time MOP regulation in cooling	Real	15.0	s	0.0...800.0	R/W
B022	S	B022 - ExV MOP regulation threshold in heating	Real	20.0	°C/°F	LOP Set...200°C (392°K)	R/W
B023	S	B023 - ExV integral time MOP regulation in heating	Real	15.0	s	0.0...800.0	R/W
B024	S	B024 - ExV low SH alarm delay time	Int	300	s	0...9999	R/W
B025	S	B025 - ExV LOP alarm delay time	Int	300	s	0...9999	R/W
B026	S	B026 - ExV MOP alarm delay time	Int	300	s	0...9999	R/W
B027	S	B027 - ExV high condensing temperature threshold	Real	80.0	°C/°F	-60°C (-76°K)...200°C (392°K)	R/W
B028	S	B028 - ExV high condensing temperature integral time	Real	15.0	s	0.0...800.0	R/W
B029	S	B029 - ExV high condensing temperature alarm delay time	Int	300	s	0...9999	R/W
B030	S	B030 - ExV low suction temperature alarm threshold	Real	-50.0	°C/°F	0...9999	R/W
B031	S	B031 - ExV low suction temperature alarm delay time	Int	120	s	0...9999	R/W
B032	S	B032 - Capacity ratio (EVAP / EEV) in cooling	Int	80	%	0...100	R/W
B033	S	B033 - Capacity ratio (EVAP / EEV) in heating	Int	75	%	0...100	R/W
B034	S	B034 - Pump down end temperature threshold	Real		°C/°F	-999.9...999.9	R/W
B035	S	B035 - Pump down maximum time duration	Int	15	s	0...999	R/W
B036	S	B036 - Pump down type	Int	0	-	0:None; 2: At stop;2: At start; 3: Both	R/W
B037	S	B037 - ExV regulation delay after power-on	Int	6	s	0...999	R/W
B038	M	B038 - ExV minimum steps custom	Int	50	-	0...9999	R/W
B039	M	B039 - ExV maximum steps custom	Int	480	-	0...9999	R/W
B040	M	B040 - ExV full closing steps custom	Int	500	-	0...9999	R/W
B041	M	B041 - ExV move rate custom	Int	50	Hz	1...2000	R/W
B042	M	B042 - ExV emergency fast close rate custom	Int	50	Hz	1...2000	R/W
B043	M	B043 - ExV move current custom	Int	450	mA	0...800	R/W
B044	M	B044 - ExV hold current custom	Int	100	mA	0...250	R/W
B045	M	B045 - ExV duty cycle custom	Int	30	%	1...100	R/W
B046	M	B046 - ExV opening valve position synchronization custom	Bool	1	-	0: Off; 1: On	R/W
B047	M	B047 - ExV closing valve position synchronization custom	Bool	1	-	0: Off; 1: On	R/W
B048	M	B048 - ExV power supply mode (0~24 Vac; 1~24 Vdc)	Bool	0	-	0: Off; 1: On	R/W
B050	M	B050 - ExV valve type (for EVD EVO)	Int	1	-	0:Custom; 1:Carel EXV; 2:Alco EX4; 3:Alco EX5; 4:Alco EX6; 5:Alco EX7; 6:Alco EX8 330HZ; 7:Alco EX8 500Hz; 8:Sporlan SEI 0.5-11; 9:Sporlan SER 1.5-20; 10:Sporlan SEI 30; 11:Sporlan SEI 5; 12:Sporlan SEH 100; 13:Sporlan SEH 175; 14:Danfoss ETS 12.5-25B; 15:Danfoss ETS 50B; 16:Danfoss ETS 100B; 17:Danfoss ETS 250; 18:Danfoss ETS 400; 19:Two Carel EXV; 20:Sporlan SER(I) G, J, K; 21:Danfoss CCM 10-20-30; 22:Danfoss CCM 40	R/W
B051	M	B051 - Enable electronic expansion valve	Bool	1	-	0: Off; 1: On	R/W
B052	M	B052 - Factory default installation EVDEVO	Bool	0	-	0: Off; 1: On	R/W
B053	M	B053 - EVD type (0: EVD Embedded; 1: EVDEVO)	Usint	0	-	0: UNIPOLAR (EVDEmb); 1: BIPOLAR (EVDEVO)	R/W

7.4.4 Compressor

Param. Code	PWD	Variable Description	Type	Default	UoM	Range	R/W
Ca00	S	Ca00 - Compressor 1 circuit 1 maintenance hour threshold	UDInt	30000	h	0...999999	R/W
Ca01	S	Ca01 - Compressor 1 circuit 1 manual mode	Int		-	0: Auto; 1: Off; 2: On	R/W
Ca02	S	Ca02 - Compressor 2 circuit 1 maintenance hour threshold	UDInt	30000	h	0...999999	R/W
Ca03	S	Ca03 - Compressor 2 circuit 1 manual mode	Int		-	0: Auto; 1: Off; 2: On	R/W
Ca04	S	Ca04 - Compressor 3 circuit 1 maintenance hour threshold	UDInt	30000	h	0...999999	R/W
Ca05	S	Ca05 - Compressor 3 circuit 1 manual mode	Int		-	0: Auto; 1: Off; 2: On	R/W
Ca06	S	Ca06 - Compressor 1 circuit 2 maintenance hour threshold	UDInt	30000	h	0...999999	R/W
Ca07	S	Ca07 - Compressor 1 circuit 2 manual mode	Int		-	0: Auto; 1: Off; 2: On	R/W
Ca08	S	Ca08 - Compressor 2 circuit 2 maintenance hour threshold	UDInt	30000	h	0...999999	R/W
Ca09	S	Ca09 - Compressor 2 circuit 2 manual mode	Int		-	0: Auto; 1: Off; 2: On	R/W
Ca10	S	Ca10 - Compressor 3 circuit 2 maintenance hour threshold	UDInt	30000	h	0...999999	R/W
Ca11	S	Ca11 - Compressor 2 circuit 2 manual mode	Int		-	0: Auto; 1: Off; 2: On	R/W
Ca12	S	Ca12 - Compressor minimum On time	UInt	180	s	0...999	R/W
Ca13	S	Ca13 - Compressor minimum Off time	UInt	60	s	0...999	R/W
Ca14	S	Ca14 - Minimum time between On of same compressor	UInt	360	s	0...9999	R/W
Ca15	S	Ca15 - Compressor load up time	UInt	30	s	0...999	R/W
Ca16	S	Ca16 - Compressor load down time	UInt	10	s	0...999	R/W
Ca17	S	Ca17 - Evaporating min. temperature custom envelop limit	Real	-25.0	°C/°F	-999.9...999.9	R/W
Ca18	S	Ca18 - Condensing max. temperature custom envelop limit	Real	70.0	°C/°F	-999.9...999.9	R/W
Ca19	S	Ca19 - Low pressure pressostat alarm start delay	UInt	10	s	0...99	R/W
Ca20	S	Ca20 - Low pressure pressostat alarm run delay	UInt	3	s	0...99	R/W
Ca21	S	Ca21 - Prevent minimum duration	UInt	360	s	0...999	R/W
Ca22	S	Ca22 - Out of envelope alarm delay time	UInt	120	s	0...999	R/W
Ca23	S	Ca23 - Circ. destabil.: compr. off max time with active circuit	UInt	240	min	0...999	R/W
Ca24	S	Ca24 - Circuit destabilization minimum BLDC speed threshold	Real	35.0	rps	0.0...999.9	R/W
Ca25	S	Ca25 - Oil recovery minimum request for activation	Real	35.0	%	0.0...100.0	R/W
Ca26	S	Ca26 - Oil recovery minimum compressor speed for activation	Real	35.0	rps	0.0...999.9	R/W
Ca27	S	Ca27 - Oil recovery delay (compressor running at low speed)	UInt	15	min	0...999	R/W
Ca28	S	Ca28 - Oil recovery duration (when compr. speed is forced)	UInt	3	min	0...999	R/W
Ca29	S	Ca29 - Oil recovery compressor speed forced	Real	50.0	rps	0.0...999.9	R/W
Ca30	S	Ca30 - Oil equalization SV startup time on compressor starts	UInt	30	s	0...999	R/W
Ca31	S	Ca31 - Oil equalization solenoid valve open time	UInt	3	s	0...999	R/W
Ca32	S	Ca32 - Oil equalization solenoid valve minimum off time	UInt	1	min	0...999	R/W
Ca33	S	Ca33 - Oil equalization solenoid valve maximum off time	UInt	20	min	0...999	R/W
Ca34	S	Ca34 - Oil equalization maximum time for the management	UInt	20	min	0...999	R/W
Ca35	S	Ca35 - Circuit power distribution	UInt	1	-	0:Grouped; 1:Equalized; 2:Group.start - equ.stop	R/W
Ca36	S	Ca36 - Discharge temperature probe circuit 1 - Probe offset	Real	0.0	°C/°F	-99.9...99.9	R/W
Ca37	S	Ca37 - Suction temperature probe circuit 1 - Probe offset	Real	0.0	°C/°F	-99.9...99.9	R/W
Ca38	S	Ca38 - Discharge temperature probe circuit 2 - Probe offset	Real	0.0	°C/°F	-99.9...99.9	R/W
Ca39	S	Ca39 - Suction temperature probe circuit 2 - Probe offset	Real	0.0	°C/°F	-99.9...99.9	R/W
Ca40	S	Ca40 - Condensing temperature probe circuit 1 - Probe offset	Real	0.0	°C/°F	-99.9...99.9	R/W
Ca41	S	Ca41 - Discharge pressure probe circuit 1 - Probe offset	Real	0.0	bar/psi	-99.9...99.9	R/W
Ca42	S	Ca42 - Suction pressure probe circuit 1 - Probe offset	Real	0.0	bar/psi	-99.9...99.9	R/W
Ca43	S	Ca43 - Condensing temperature probe circuit 2 - Probe offset	Real	0.0	°C/°F	-99.9...99.9	R/W
Ca44	S	Ca44 - Discharge pressure probe circuit 2 - Probe offset	Real	0.0	bar/psi	-99.9...99.9	R/W
Ca45	S	Ca45 - Suction pressure probe circuit 2 - Probe offset	Real	0.0	bar/psi	-99.9...99.9	R/W
Ca46	M	Ca46 - High pressure pressostat input logic	Bool	0	-	0:Alarm if open; 1:Alarm if close	R/W
Ca47	M	Ca47 - Low pressure pressostat input logic	Bool	0	-	0:Alarm if open; 1:Alarm if close	R/W
Ca48	M	Ca48 - Compressor overload input logic	Bool	0	-	0:Alarm if open; 1:Alarm if close	R/W
Ca49	M	Ca49 - Compressor output logic (0=NO; 1=NC)	Bool	0	-	0:On if close;1:On if open	R/W
Ca50	M	Ca50 - Oil equalization solenoid valve circuit 1 output logic	Bool	0	-	0:On if close;1:On if open	R/W
Ca51	M	Ca51 - Suction temperature probe type	Bool	0	-	0=NTC; 1=NTC-HT	R/W
Ca52	M	Ca52 - Discharge temperature probe type	Bool	0	-	0=NTC; 1=NTC-HT	R/W
Ca53	M	Ca53 - Suction pressure probe type	Bool	0	-	0=0...5V; 1=4...20mA	R/W
Ca54	M	Ca54 - Suction pressure probe minimum value	Real	0.0	bar/psi	-999.9...999.9	R/W
Ca55	M	Ca55 - Suction pressure probe maximum value	Real	17.3	bar/psi	Ca53...999.9	R/W
Ca56	M	Ca56 - Discharge pressure probe type	Bool	0	-	0=0...5V; 1=4...20mA	R/W
Ca57	M	Ca57 - Discharge pressure probe minimum value	Real	0.0	bar/psi	-999.9...999.9	R/W
Ca58	M	Ca58 - Discharge pressure probe maximum value	Real	45.0	bar/psi	Ca56...999.9	R/W
Ca59	M	Ca59 - Enable the circuit destabilization function	Bool	0	-	0:Off; 1:On	R/W
Ca60	M	Ca60 - Enable prevent control for On Off compressors	Bool	1	-	0:Off; 1:On	R/W
Ca61	M	Ca61 - Enable the oil recovery function	Bool	0	-	0:Off; 1:On	R/W
Ca62	M	Ca62 - Enable oil equalization function	Bool	0	-	0:Off; 1:On	R/W

Ca63	M	Ca63 - Refrigerant type (only for On/Off compressor units)	UInt	4	-	0:R22; 1:R134a; 2:R404A; 3:R407C; 4:R410A; 5:R507A; 6:R290; 7:R600; 8:R600a; 9:R717; 10:R744; 11:R728;12:R1270; 13:R417A; 14:R422D; 15:R413A; 16:R422A; 17:R423A; 18:R407A; 19:R427A; 20: R245FA; 21:R407F; 22:R32; 23:HTR01; 24:HTR02; 25:R23; 26:HFO1234yf; 27: HFO1234ze	R/W
Ca64	M	Ca64 - Compressor 1 circuit 1 device power	Real	50.0	%	0.0...100.0	R/W
Ca65	M	Ca65 - Compressor 2 circuit 1 device power	Real	50.0	%	0.0...100.0	R/W
Ca66	M	Ca66 - Compressor 3 circuit 1 device power	Real	50.0	%	0.0...100.0	R/W
Ca67	M	Ca67 - Compressor manufacturer for On/Off compressors	UInt	8	-	0:-; 1:BITZER; 2:-; 3:-; 4:-; 5:-; 6:-; 7:COPELAND; 8:DANFOSS	R/W
Ca67	M	Ca67 - Compressor model for On/Off compressors (BITZER)	UInt	5	-	0:GSD6; 1:GSD8xxxxxVA; 2:GSD8xxxxxVW; 3:ESH	R/W
Ca67	M	Ca67 - Compressor model for On/Off compressors (COPELAND)	UInt	5	-	0:ZR 18K-81K; 1:ZR 94K-190K; 2:ZR 250K-380K; 3:ZP 24K-91K; 4:ZP 103K-182K; 5:ZP 235K-485K; 6:ZH04-19K1P; 7:ZH12K4E-11M4E	R/W
Ca68	M	Ca68 - Compressor model for On/Off compressors (DANFOSS)	UInt	5	-	0:HR/HL/HC mod. U; 1:HR/HL/HC mod. T; 2:HR/HL/HC mod. T; 3:HHP; 4:CXH140; 5:SH; 6:WSH; 7:SZ084-185/SY185; 8:SZ240-380/SY240-300	R/W
Ca69	M	Ca69 - Number of circuit in the unit	USInt	2	-	1...2	R/W
Ca70	M	Ca70 - Compressor used in the circuit	USInt	1	-	0:BLDC; 1:BLDC tandem; 2:BLDC trio; 3:1 fixed on-off; 4:2 fixed on-off; 5:3 fixed on-off	R/W
Ca71	M	Ca71 – Disabled rotation	Bool	0	-	0: NO, 1: YES	R/W
Ca72	M	Ca72 - Minimum inverter compressor capacity	Int	10	%	0...100	R/W
Ca73	M	Ca73 - Maximum inverter compressor capacity	Int	100	%	0...100	R/W

7.4.5 BLDC Compress

Param. Code	PWD	Variable Description	Type	Default	UoM	Range	R/W
Cb00	S	Ca00 – Compressor 1 circuit 1 maintenance hour threshold	UDInt	30000	h	0…999999	R/W
Cb01	S	Ca01 – Compressor 1 circuit 1 manual mode	Int		-	0: Auto; 1:0%; 2:1%...100:99%; 101:100%	R/W
Cb02	S	Ca06 – Compressor 1 circuit 2 maintenance hour threshold	UDInt	30000	h	0…999999	R/W
Cb03	S	Ca07 – Compressor 1 circuit 2 manual mode	Int		-	0: Auto; 1:0%; 2:1%...100:99%; 101:100%	R/W
Cb04	S	Max. permitted Delta P to start up (bar/psi)	Real	10.0	bar/psi	0.0…15.0	R/W
Cb05	S	Min. variation of Delta P to considered compressor started	Real	0.3	bar/psi	0.0…2.0	R/W
Cb06	S	Delay to check increasing DeltaP to validate compr. Started	Int	15	s	10…99	R/W
Cb07	S	Restart delay after a start failure	Int	30	s	1…360	R/W
Cb08	S	Max Number of starting attempts	Int	5	-	0…9	R/W
Cb09	S	Start up speed	Real	50.0	rps	20.0…120.0	R/W
Cb10	S	Max speed custom (rps)	Real	120.0	rps	Cb11…999.9	R/W
Cb11	S	Min speed custom (rps)	Real	20.0	rps	0.0…99.9	R/W
Cb12	S	Max. decrease speed rate (in regulation)	Real	1.6	rps/s	0.1…9.9	R/W
Cb13	S	Max. increase speed rate (in regulation)	Real	1.0	rps/s	0.1…9.9	R/W
Cb14	S	Decrease max speed rate in stopping compressor	Real	2.0	rps/s	0.1…9.9	R/W
Cb15	S	Decrease speed rate (to come back inside envelope)	Real	0.8	rps/s	0.1…9.9	R/W
Cb16	S	Min speed permitted to control working point inside envelope	Real	20.0	rps	0.1…99.9	R/W
Cb17	S	Out of envelope alarm delay	Int	60	s	0…32000	R/W
Cb18	S	Low Delta pressure alarm delay	Int	60	s	0…32000	R/W
Cb19	S	Suction sat.temp. threshold from zone 1b (max120rps) to zone 1c (max90rps SIAM only)	Real	12.0	°C/°F	0.0…99.9	R/W
Cb20	S	Max admitted speed in zone 1c (SIAM Scroll only)	Int	90	rps	20…120	R/W
Cb21	S	Enable MOP control in low compression ratio condition	Bool	1	-	0:Off; 1:On	R/W
Cb22	S	Speed up mode enable to control zones 5, 6, 7, 8	Bool	0	-	0:Off; 1:On	R/W
Cb23	S	Discharge gas temp.control threshold for Zone 1a (SIAM scroll)	Real	105.0	°C/°F	70.0…350.0	R/W
Cb24	S	Discharge gas limit temperature for Zone 1a (SIAM Scroll)	Real	110.0	°C/°F	80.0…350.0	R/W
Cb25	S	Discharge gas temp.control threshold (SIAM scroll: zone 1b)	Real	115.0	°C/°F	70.0…350.0	R/W
Cb26	S	Discharge gas limit temp. (SIAM Scroll only: Zone 1b)	Real	120.0	°C/°F	80.0…350.0	R/W
Cb27	S	Action distance from high temp. limit (to reduce speed rate)	Real	20.0	°C/°F	10.0…99.9	R/W
Cb28	S	Pause between speed reductions on discharge temp. limiting	Int	90	s	1…300	R/W
Cb29	S	Speed reduction percentage on discharge temp. limiting	Real	3.0	%	0.5…60.0	R/W
Cb30	S	Regol. Evd SubType: 0=null; 1=SSH; 2=DSH; 3= DLT	Int	1	-	1:Suction SH; 2:Discharge SH; 3:Disch. Temp.	R/W
Cb31	S	Time constant of discharge temperature sensor	Real	50.0	s	1.0…800.0	R/W
Cb32	S	SetPoint of Discharge SH (sent to EVD)	Real	35.0	°C/°F	10.0…45.0	R/W
Cb33	S	Setpoint offset for Discharge Super Heat regulation activation	Real	2.0	°C/°F	0.0…99.9	R/W
Cb34	S	Hysteresis for Discharge Super Heat regulation deactivation	Real	2.0	°C/°F	0.0…99.9	R/W
Cb35	S	SetPoint of Discharge Temp (sent to EVD)	Real	105.0	°C/°F	75.0…110.0	R/W
Cb36	S	Setpoint offset for Discharge Limit Temp. regulation activation	Real	8.0	°C/°F	0.0…99.9	R/W
Cb37	S	Hysteresis for Discharge Limit Temp. regulation deactivation	Real	5.0	°C/°F	0.0…99.9	R/W
Cb38	M	Equivalent BLDC speed request threshold to call on it	Real	45.0	rps	0.0…999.9	R/W
Cb39	M	BDLC speed threshold to call on fixed speed compressor	Real	90.0	rps	0.0…999.9	R/W
Cb40	M	BDLC speed threshold to switch off fixed speed compressor	Real	30.0	rps	0.0…999.9	R/W
Cb41	S	Equalization mode	Bool	0	-	0:EEV PRE-OPENING; 1:EQUALIZATION VALVE	R/W
Cb42	S	Maximum equalization time	Int	10	s	0…999	R/W
Cb43	S	Percentage of the EEV preopening	Int	50	%	0…100	R/W

7.4.6 POWER+

Param. Code	PWD	Variable Description	Type	Default	UoM	Range	R/W
D000	S	Min output frequency [007]	Real	60.0	Hz	0.0…999.9	R/W
D001	S	Max output frequency [006]	Real	360.0	Hz	D000…999.9	R/W
D002	S	Skip frequency: set 1 [010]	Real	0.0	Hz	0.0…999.9	R/W
D003	S	Skip frequency: band 1 [011]	Real	0.0	Hz	0.0…999.9	R/W
D004	S	Skip frequency setpoint 2 [067]	Real	0.0	Hz	0.0…999.9	R/W
D005	S	Skip frequency band 2 [068]	Real	0.0	Hz	0.0…999.9	R/W
D006	S	Skip frequency setpoint 3 [069]	Real	0.0	Hz	0.0…999.9	R/W
D007	S	Skip frequency band 3 [070]	Real	0.0	Hz	0.0…999.9	R/W
D008	S	Switching frequency [024]	Uint	1	-	0:4 kHz; 1:6 kHz; 2:8 kHz	R/W
D009	S	Switching frequency derating [025]	Uint	0	-	0:Off; 1:On	R/W
D010	M	Motor overtemperature alarm (PTC) enable [027]	Uint	0	-	0:Off; 1:On	R/W
D011	M	Motor overtemperature alarm delay [028]	Uint	0	s	0…999	R/W
D012	M	Reverse speed enable [008]	Uint	0	-	0:Off; 1:On	R/W
D013	M	Speed derating mode [009]	Uint	0	°C	(0:None)	R/W
D014	M	Stop mode [033]	Uint	1	-	0:Ramp; 1:Coast	R/W
D015	M	Flying restart [034]	Uint	0	-	0:Off; 1:On	R/W
D016	M	Relay configuration [026]	Uint	0	-	0:Alarm; 1:Fan control ;2: Drive OT alarm; 3:Motor OT alarm; 4:Motor OL alarm; 5:Overvoltage alarm; 6:Undervoltage alarm; 7: Derating; 8:Drive run	R/W
D017	M	D017 – Save custom config. Command	Bool	0	-	0:No; 1: Yes	R/W
D018	M	D018 – Motor pole pairs	Uint	3	-	1:2; 2:4; 3:6; 4:8; 5:10	R/W
D019	M	Motor control mode [000]	Uint	0	-	0:PM; 1: AC vector; 2:AC V/F	R/W
D020	M	Motor base frequency [001]	Real	360.0	Hz	0.0…999.9	R/W
D021	M	Motor base voltage [002]	Uint	277	Vrms	0…999	R/W
D022	S	Motor rated current [003]	Real	18.0	Arms	0.0…999.9	R/W
D023	S	Motor power factor [004]	Uint	100	%	0…100	R/W
D024	S	Max output current [005]	Real	100.0	%	0.0…200.0	R/W
D025	M	Speed profile: frequency 1 [012]	Real	18.0	Hz	0.0…999.9	R/W
D026	M	Speed profile: frequency 2 [013]	Real	180.0	Hz	0.0…999.9	R/W
D027	M	Speed profile: frequency 3 [014]	Real	180.0	Hz	0.0…999.9	R/W
D028	M	Speed profile: acceleration 1 [015]	Real	18.0	Hz/s	0.0…50.0	R/W
D029	M	Speed profile: acceleration 2 [016]	Real	6.0	Hz/s	0.0…50.0	R/W
D030	M	Speed profile: acceleration 3 [017]	Real	6.0	Hz/s	0.0…50.0	R/W
D031	M	Speed profile: acceleration 4 [018]	Real	6.0	Hz/s	0.0…50.0	R/W
D032	M	Speed profile: delay 1 [019]	Uint	0	s	0…999	R/W
D033	M	Speed profile: delay 2 [020]	Uint	180	s	0…999	R/W
D034	M	Speed profile: delay 3 [021]	Uint	0	s	0…999	R/W
D035	M	Speed profile start mode (0= always; 1=once at run) [022.0]	Bool	1	-	0:Always; 1:Once at run	R/W
D036	M	Speed profile start mode (0=-; 1=force freq. 2) [022.1]	Bool	1	-	0:No; 1:Force freq.2	R/W
D037	M	Speed profile: deceleration [023]	Real	6.0	Hz/s	0.0…50.0	R/W
D038	M	V/f boost voltage [035]	Real	0.0	%	0.0…25.0	R/W
D039	M	V/f frequency adjustment [036]	Real	0.0	%	0.0…100.0	R/W
D040	M	V/f voltage adjustment [037]	Real	0.0	%	0.0…100.0	R/W
D041	M	Motor magnetizing current [045]	Real	0.0	A	0.0…D022	R/W
D042	M	Stator resistance [046]	Uint	300	mohm	0…65535	R/W
D043	M	Rotor resistance [047]	Uint	0	mohm	0…65535	R/W
D044	M	Stator inductance Ld [048]	Real	3.0	mH	0.0…999.9	R/W
D045	M	Leakage factor [049]	Uint	0	-	0…250	R/W
D046	M	Stator inductance Lq [050]	Real	6.0	mH	0.0…999.9	R/W
D047	M	Speed loop Kp [055]	Real	75.0	%	0.1…200.0	R/W
D048	M	Speed loop Ti [056]	Uint	100	ms	1…1000	R/W
D049	M	Magnetizing time [051]	Uint	100	ms	0…30000	R/W
D050	M	Starting current [057]	Real	30.0	%	0.0…100.0	R/W
D051	M	Frequency for starting current [058]	Real	11.7	%	0.0…100.0	R/W
D052	M	D052 – Crank-case heater mode	Uint	0	-	0:Auto; 1:Force on; 2:Force off	R/W
D053	M	Crank-case heater current [065]	Real	0.0	%	0.0…100.0	R/W
D054	M	Safety torque off alarm autoreset on drive stand-by [066]	Uint	0	-	0:Man. Reset; 1:Auto-reset; 2: Signal only	R/W
D055	M	Disable phase loss algorithm (0=enabled; 1=disabled) [076.0]	Bool	0	-	0:No; 1:Yes	R/W
D056	M	Thermal Overload Retention Enable [076.3]	Bool	0	-	0:No; 1:Yes	R/W
D057	M	Inductance saturation factor [077]	Real	0.0	%	0.0…100.0	R/W
D058	M	Data communication fault timeout [029]	Uint	30	s	0…600	R/W
D060	M	Serial number control enable	Bool	0	-	0:No; 1:Yes	
D061	M	Compressor model (PowerPlus)	Uint	1	-	(see documentation)	R/W
D062	M	Drive type	Uint	9	-	0:NONE; 1:PSD0*122**; 2:PSD0*162**; 3: PSD0*144**; 4:PSD0*244**; 5:PSD1*122**; 6:PSD1*162**; 7:PSD1*102**; 8:PSD1*??2**; 9:PSD1*184**; 10:PSD1*244**; 11:PSD1*354**; 12:PSD1*??4**	R/W
D063	M	Write default request	Int	0	-	0:No; 1:Yes	R/W

7.4.7 Source

Param. Code	PWD	Variable Description	Type	Default	UoM	Range	R/W
E000	S	E000 – Source pump 1 maintenance hour threshold	UDInt	99000	h	0….999999	R/W
E001	S	E001 – Source pump 1 manual mode (modulating)	Uint	0	-	0: Auto; 1:0%;…101:100%	R/W
E002	S	E002 – Source pump 2 maintenance hour threshold	UDInt	99000	h	0….999999	R/W
E003	S	E003 – Source pump 2 manual mode (modulating)	Uint	0	-	0: Auto; 1:0%;…101:100%	R/W
E004	S	E004 – Source pump 1 manual mode (on-off)	Uint	0	-	0: Auto; 1:Off; 2:On	R/W
E005	S	E005 – Source pump 2 manual mode (on-off)	Uint	0	-	0: Auto; 1:Off; 2:On	R/W
E006	S	E006 – Source fan 1 circuit 1 maintenance hour threshold	UDInt	99000	h	0….999999	R/W
E007	S	E007 – Source fan circuit 1 manual mode	Uint	0	-	0: Auto; 1:0%;…101:100%	R/W
E008	S	E008 – Source fan 1 circuit 1 manual mode	Uint	0	-	0: Auto; 1:Off; 2:On	R/W
E009	S	E009 – Source fan 1 circuit 1 maintenance hour threshold	UDInt	99000	h	0….999999	R/W
E010	S	E010 – Source fan circuit 2 manual mode	Uint	0	-	0: Auto; 1:0%;…101:100%	R/W
E011	S	E011 – Source fan 1 circuit 2 manual mode	Uint	0	-	0: Auto; 1:Off; 2:On	R/W
E012	S	E012 – Source fan temperature threshold for cold climates	Real	-5.0	°C/°F	-99.9…99.9	R/W
E013	S	E013 – Source fan minimum speed for cold climates	Real	10.0	%	0.0…100.0	R/W
E014	S	E014 – Source fan speed up speed for cold climates	Real	50.0	%	0.0…100.0	R/W
E015	S	E015 – Source fan speed up time for cold climates	Uint	5	s	0…300	R/W
E016	S	E016 – Enable low noise function	Bool	0	-	0:No; 1:Yes	R/W
E017	S	E017 – Low noise start hour time band	Int	22	h	0…23	R/W
E017	S	E017 – Low noise start minute time band	Int	0	min	0…59	R/W
E018	S	E018 – Low noise end hour time band	Int	7	h	0…23	R/W
E018	S	E018 – Low noise end minute time band	Int	0	min	0…59	R/W
E019	S	E019 – Low noise fan setpoint in cooling	Real	45.0	°C/°F	0.0…999.9	R/W
E020	S	E020 – Source pump flow alarm startup delay	Uint	10	s	0…999	R/W
E021	S	E021 – Source pump flow alarm run delay	Uint	3	s	0…999	R/W
E022	S	E023 – Source pump delay Off since the compressor Off	Uint	10	s	0…999	R/W
E023	S	E022 – Compressor delay On since the source pump On	Uint	30	s	0…999	R/W
E024	S	E024 – Source pump rotation time	Uint	12	h	0…99	R/W
E025	S	E025 – Source fan setpoint in chiller mode	Real	30.0	°C/°F	-999.9…999.9	R/W
E026	S	E026 – Source fan setpoint in heatpump mode	Real	10.0	°C/°F	-999.9…999.9	R/W
E027	S	E027 – Source setpoint offset CH	Real	5.0	°C/°F	0.0…99.9	R/W
E028	S	E028 – Source fan setpoint at startup in chiller mode	Real	45.0	°C/°F	0.0…999.9	R/W
E029	S	E029 – Source fan startup delay in chiller mode	Uint	240	s	0…999	R/W
E030	S	E030 – Source setpoint offset HP	Real	3.0	°C/°F	0.0…99.9	R/W
E031	S	E031 – Source fan differential in chiller mode	Real	15.0	°C/°F	0.0…99.9	R/W
E032	S	E032 – Source fan differential in heatpump mode	Real	5.0	°C/°F	0.0…99.9	R/W
E033	S	E033 – Source inverter fan/pump minimum speed	Real	20.0	%	0.0…100.0	R/W
E034	S	E034 – Source inverter fan/pump maximum speed	Real	80.0	%	0.0…100.0	R/W
E035	S	E035 – Enable source pump run at minimum power/off	Bool	0	-	0:Wait cond.regul.; 1:Run at min speed	R/W
E036	S	E036 – Defrost start threshold	Real	-1.0	°C/°F	-99.9…99.9	R/W
E037	S	E037 – Defrost start threshold reset	Real	1.0	°C/°F	E036…99.9	R/W
E038	S	E038 – Defrost start delay	Uint	30	min	0…99	R/W
E039	S	E039 – Defrost end threshold	Real	52.0	°C/°F	-999.9…999.9	R/W
E040	M	E040 – Enable sliding defrost option	Bool	0	-	0:No; 1:Yes	R/W
E041	S	E041 – Defrost begin delay before actuating the 4 way valve	Uint	20	s	0…999	R/W
E042	S	E042 – Defrost ending delay after actuating the 4 way valve	Uint	30	s	0…999	R/W
E043	S	E043 – Delay to check for simultaneous defrost	Uint	300	s	0…99	R/W
E044	S	E044 – Defrost minimum duration	Uint	1	min	0…99	R/W
E045	S	E045 – Defrost maximum duration	Uint	5	min	0…99	R/W
E046	S	E046 – Dripping duration	Uint	90	s	0…999	R/W
E047	S	E047 – Post dripping duration	Uint	30	s	0…999	R/W
E048	S	E048 – Delay between defrosts	Uint	20	min	0…999	R/W
E049	S	E049 – BLDC maximum speed in defrost	Real	80.0	rps	0.0…999.9	R/W
E050	S	E050 – BLDC minimum speed in defrost	Real	40.0	rps	0.0…999.9	R/W
E051	S	E051 – Defrost synchronization type	USInt	0	-	0:Independent; 1:Separated; 2:Simultaneous	R/W
E052	S	E052 – Delta pressure to reverse the 4 way valve	Real	3.0	bar/psi	0.0…999.9	R/W
E053	S	E053 – Antifreeze source alarm threshold	Real	-0.8	°C/°F	-999.9…999.9	R/W
E054	S	E054 – Antifreeze source alarm differential	Real	30.0	°C/°F	0.0…999.9	R/W
E055	S	E055 – Antifreeze source alarm delay at 1K below threshold	Uint	60	s	0…999	R/W
E056	S	External air temperature – Probe offset	Real	0.0	°C/°F	-99.9…99.9	R/W
E057	S	Water inlet probe source – Probe offset	Real	0.0	°C/°F	-99.9…99.9	R/W
E058	M	E058 – Source pump overload input logic (0–NO; 1–NC)	Bool	0	-	0: Alarm if open; 1: Alarm if close	R/W
E059	M	E059 – Source pump flow input logic (0–NO; 1–NC)	Bool	0	-	0: Alarm if open; 1: Alarm if close	R/W
E060	M	E060 – Source fan output logic (0–NC; 1–NO)	Bool	0	-	0:On if close; 1:On if open	R/W
E061	M	E061 – Source pump output logic (0–NO; 1–NC)	Bool	0	-	0:On if close; 1:On if open	R/W
E062	M	E062 – Reverse valve output logic (0–NO; 1–NC)	Bool	0	-	0:Heat if close; 1:Heat if open	R/W
E063	M	E063 – Source analog output type (0–0…10V; 1–PWM)	Bool	0	-	0:0…10V; 1:PWM	R/W
E064	M	E064 – PWM minimum phase delay	Real	7.0	%	0.0…100.0	R/W
E065	M	E065 – PWM maximum phase delay	Real	92.0	%	0.0…100.0	R/W
E066	M	E066 – PWM pulse width time	Real	2.5	ms	0.0…10.0	R/W
E067	M	E067 – Air flow type (0–Independent; 1–Common)	Bool	0	-	0–Independent; 1–Common	R/W
E068	M	E068 – Number of source pumps	USInt	1	-	1…2	R/W
E069	M	E069 – Source pump type (0–On/Off; 1–Inverter)	Bool	0	-	0–On/Off; 1–Inverter	R/W
E070	M	E070 – Source fan type (0–Inverter, 1–On/Off)	Bool	0	-	0–Inverter, 1–On/Off	R/W
E071	M	E071 – Unit type (0–Air/Water; 1–Water/Water)	Bool	0	-	0–Air/water; 1–Water/water	R/W
E072	S	E072 – Source fan setpoint type	Usint	0	-	0–With envelope; 1–Fixed setpoint	R/W
E073	S	E073 – Minimum envelope setpoint	Real	0.0	°C/°F	0.0…100.0	R/W
E074	S	E074 – Maximum envelope setpoint	Real	30.0	°C/°F	0.0…100.0	R/W
E075	S	E075 – Defrost high pressure threshold checking	Real	45.0	bar/psi	0.0…200.0	R/W
E076	S	E076 – Compressor behavior in the post-defrost phase	Bool	0	-	0: The compressor is Off, 1: The compressor is turned On	R/W

E077	S	E077 – Defrost duration of smart start function [s]	Uint	60	s	0…999	R/W
E078	M	E078 – Circuit 1 – Start manually the defrost procedure	Bool	0	-	0: DISATTIVATO; 1: ATTIVATO	R/W
E079	M	E079 – Circuit 2 – Start manually the defrost procedure	Bool	0	-	0: DISATTIVATO; 1: ATTIVATO	R/W

7.4.8 Settings: Date-Time

Param. Code	PWD	Variable Description	Type	Default	UoM	Range	R/W
Ga00	S	Ga00 – Date format	Int	0	-	0:dd/mm/yy; 1:mm/dd/yy;2:yy/mm/dd	R/W
Ga01	S	Ga01 – Writing of new day value	Uint	0	-	1…31	R/W
Ga01	S	Ga01 – Writing of new month value	Uint	0	-	1…12	R/W
Ga01	S	Ga01 – Writing of new year value	Uint	0	-	0…99	R/W
Ga02	S	Ga02 – Writing of new Hour value	Uint	0	-	0…24	R/W
Ga02	S	Ga02 – Writing of new minute value	Uint	0	-	0…59	R/W
Ga02	S	Ga02 – Writing of new seconds value	Uint	0	-	0…59	R/W

7.4.9 Settings: UoM

Param. Code	PWD	Variable Description	Type	Default	UoM	Range	R/W
Gb00	U	Gb00 – Unit of measure used in mask (0:none, 1:SI, 2:USA, 3:UK, 4:CAN, 5:LON, 6:SI with bar)	Dint	6	-	1:SI(°C,Kpa); 2:USA(°F,Psi); 3:UK(°F,Psi); 4:CAN(°C,Psi); 5:LON: 6:SI(°C,Bar)	R/W

7.4.10 Settings: Inputs

Param. Code	PWD	Variable Description	Type	Default	UoM	Range	R/W
Gd00	S	Gd00 – Configurable universal input U3	Int	1	-	0:Discharge temp.; 1:source temp.	R/W
Gd01	S	Gd01 – Configurable universal input U4	Int	0	-	0:discharge press.; 1:condensing temp.	R/W
Gd02	S	Gd02 – Configurable universal input U8	Int	5	-	0:Ovld comp.1; 1:Ovld comp.2; 2:Ovld user pump; 3:Ovld source pump; 4:Source pump flow; 5:Cool/heat; 6:2°setp.; 7:Unit on/off; 8:Remote alarm	R/W
Gd03	S	Gd03 – Configurable universal input U9	Int	6	-	0:Ovld comp.1; 1:Ovld comp.2; 2:Ovld user pump; 3:Ovld source pump; 4:Source pump flow; 5:Cool/heat; 6:2°setp.; 7:Unit on/off; 8:Remote alarm	R/W
Gd04	S	Gd04 – Configurable universal input U10	Int	7	-	0:Ovld comp.1; 1:Ovld comp.2; 2:Ovld user pump; 3:Ovld source pump; 4:Source pump flow; 5:Cool/heat; 6:2°setp.; 7:Unit on/off; 8:Remote alarm	R/W

7.4.11 Settings: Serial Ports

Param. Code	PWD	Variable Description	Type	Default	UoM	Range	R/W
Ge00	S	Ge00 – BMS address	UDInt	1	-	1…247	R/W
Ge01	S	Ge01 – BMS baudrate	Int	2	-	0:4800; 1:9600; 2:19200; 3: 38400	R/W
Ge02	S	Ge02 – BMS parity	Uint	0	-	0:None; 1:Odd; 2: Even	R/W
Ge03	S	Ge03 – BMS stopbit	Uint	2	-	1…2	R/W
Ge04	S	Ge04 – Fieldbus address	UDInt	150	-	1…247	R/W
Ge05	S	Ge05 – Fieldbus baudrate	Int	2	-	0:4800; 1:9600; 2:19200; 3: 38400	R/W
Ge06	S	Ge06 – Fieldbus parity	Uint	0	-	0:None; 1:Odd; 2: Even	R/W
Ge07	S	Ge07 – Fieldbus stopbit	Uint	2	-	1…2	R/W
Ge08	S	Ge08 – Slave address	UDInt	150	-	1…247	R/W
Ge09	S	Ge09 – Slave baudrate	Int	2	-	0:4800; 1:9600; 2:19200; 3: 38400	R/W
Ge10	S	Ge10 – Slave parity	Uint	0	-	0:None; 1:Odd; 2: Even	R/W
Ge11	S	Ge11 – Slave stopbit	Uint	2	-	1…2	R/W
Ge12	S	Ge12 – PowerPlus address circuit 1	UDInt	1	-	1…247	R/W
Ge13	S	Ge13 – PowerPlus address circuit 2	UDInt	3	-	1…247	R/W
Ge14	S	Ge14 – Modbus communication timeout [ms]	UDInt	200	ms	0…999	R/W
Ge15	S	Ge15 – Modbus command delay [ms]	UDInt	40	ms	0…9999	R/W
Ge16	S	Ge16 – Unit OnOff (BMS remote commands)	Bool	0	-	0: Off; 1: On	R/W
Ge17	S	Ge17 – Unit request (BMS remote commands)	Bool	0	-	0: Off; 1: On	R/W
Ge18	S	Ge18 – Address Base PowerPlus circuit 1 [032]	Uint	1	-	1…233	R/W
Ge19	S	Ge19 – Deepswitch Addr. PowerPlus circuit 1 [121]	Uint	-	-	0…99	R
Ge20	S	Ge20 – Address Base PowerPlus circuit 2 [032]	Uint	1	-	1…233	R/W
Ge21	S	Ge21 – Deepswitch Addr. PowerPlus circuit 2 [121]	Uint	-	-	0…99	R
Ge22	S	Ge22 – BACnet Address	UDInt	1	-	1…BACnet max ID	R/W
Ge23	S	Ge23 – BACnet Baudrate	Int	3	-	1:9600; 2:19200; 3: 38400	R/W
Ge24	S	Ge24 – BMS line	Usint	1	-	0:None; 1:BMS; 2:BACnet	R/W
Ge25	S	Ge25 – BMS2 line	Usint	1	-	0:None; 1:BMS; 2:BACnet	R/W
Ge26	S	Ge26 – Ethernet 1 line	Usint	0	-	0:None; 1:BMS;	R/W
Ge27	S	Ge27 – Ethernet 2 line	Usint	0	-	0:None; 1: BACnet	R/W

7.5 SUPERVISOR TABLE

OSSTDmCHBE se puede conectar a varios sistemas de supervisión, en particular se pueden utilizar los siguientes protocolos de comunicación BMS:
Modbus, BACnet (Solo Servidor).
Es posible seleccionar en qué puerto serie conectar los dos protocolos disponibles (par. Ge24, Ge25, Ge26 y Ge27).
Esta selección está limitada según el hardware utilizado:
- Hardware: c.pco medio. Es posible elegir si habilitar Modbus o BACnet en los puertos serie BMS, BMS2, Ethernet (2 conexiones).
- Hardware: c.pco mini HighEnd. Es posible elegir si habilitar Modbus o BACnet en el puerto serie Ethernet (2 conexiones).
- Hardware: c.pco mini mejorado. Es posible elegir si habilitar Modbus o BACnet en el puerto serie BMS.

El software proporciona algunos controles de seguridad para evitar errores de configuración.
Si el protocolo BACnet está habilitado en un puerto, se activará un mensaje de advertencia si el controlador no tiene la licencia requerida.
La modificación de la selección de la línea de protocolo se aplicará solo después de reiniciar el controlador. Por esta razón cada vez que el usuario cambie la línea del protocolo, se le mostrará una máscara que le permite reiniciar (presionando “Enter”) o continuar con la modificación (presionando “Esc”).
La dirección Modbus® es la dirección especificada en la trama Modbus®.
Las siguientes tablas muestran las variables enviadas al supervisor.

7.5.1 Coils

(Read and write)

Index	Description	Def	Meaning values	BACnet
0	BMS unit switch-On/Off enable	0	0:No; 1:Yes	BV85
1	BMS unit switch-On/Off	0	0:Off; 1:On	BV125
2	Enable power request from BMS	0	0:No; 1:Yes	BV86
3	Alarm reset command by BMS	0	0:No; 1:Yes	BV126
4	Unit On-Off by keyboard (0=Off; 1=On)	0	0:Off; 1:On	BV88
5	Q003 – Chiller/Heatpump working mode by Keyboard	0	0:Chiller; 1:Heat pump	BV89
6	User pump 1 working hours counter reset	0	0:No; 1:Yes	BV1
7	User pump 2 working hours counter reset	0	0:No; 1:Yes	BV3
8	A014 – Enable scheduling function	0	0: No; 1: Yes	BV5
9	A017 – Type of scheduling (0=Switch Off/On; 1=Change setpoint)	0	0:Off unit; 1: En 2° setpoint	BV6
10	A023 – Changeover type (0=Keyboard, 1=Din)	0	0:By keyboard;1:By DIN	BV7
11	A025 – Startup regulation probe (0=Inlet; 1=Outlet)	0	0: Inlet; 1: Outlet	BV8
12	A027 – Run regulation probe (0=Inlet; 1=Outlet)	1	0: Inlet; 1: Outlet	BV9
13	A046 – Remote alarm input logic (0=NO; 1=NC)	0	0: Alarm if open;1:Alarm if close	BV10
14	A047 – Summer/Winter input logic (0=NO; 1=NC)	0	0: Heat if close;1: Heat if open	BV11
15	A048 – Unit On/Off input logic (0=NO; 1=NC)	1	0: On if open; 1: On if close	BV12
16	A049 – User pump flow input logic (0=NO; 1=NC)	0	0: Alarm if open;1:Alarm if close	BV13
17	A050 – User pump overload input logic (0=NO; 1=NC)	0	0: Alarm if open;1:Alarm if close	BV14
18	A051 – Second setpoint input logic (0=NO; 1=NC)	1	0: On if open; 1: On if close	BV15
19	A052 – User pump 1 output logic (0=NO; 1=NC)	0	0: On if close; 1: On if open	BV16
20	A053 – Global alarm output logic (0=NC; 1=NO)	0	0: Alarm if close; 1: Alarm if open	BV17
21	A054 – Free cooling solenoid valve logic (0=NO; 1=NC)	0	0: On if close; 1: On if open	BV18
22	A055 – Antifreeze heater output logic	0	0: On if close; 1: On if open	BV19
23	A056 – Alarm relay configuration (0=Regulation alarms; 1=All alarms)	1	0: Only serious alarm; 1: All alarms	BV20
24	A062 – Enable setpoint compensation function	0	0: No; 1: Yes	BV21
25	A063 – Enable free-cooling function	0	0: No; 1: Yes	BV22
26	B000 – ExV circuit 1 enable manual mode	0	0:No; 1:Yes	BV23
27	B002 – ExV circuit 2 enable manual mode	0	0:No; 1:Yes	BV24
28	B046 – ExV opening valve position synchronization custom	1	0:No; 1:Yes	BV25
29	B047 – ExV closing valve position synchronization custom	1	0:No; 1:Yes	BV26
30	B048 – ExV power supply mode (0=24 Vac; 1=24 Vdc)	0	0:24 Vac; 1:24 Vdc	BV27
31	B051 – Enable electronic expansion valve	1	0:No; 1:Yes	BV28
32	B052 – Factory default installation EVDEVO	0	0:No; 1:Yes	BV29
33	Compressor 1 circuit 1 working hours counter reset	0	0:No; 1:Yes	BV30
34	Compressor 2 circuit 1 working hours counter reset	0	0:No; 1:Yes	BV34
35	Compressor 3 circuit 1 working hours counter reset	0	0:No; 1:Yes	BV36
36	Compressor 1 circuit 2 working hours counter reset	0	0:No; 1:Yes	BV31
37	Compressor 2 circuit 2 working hours counter reset	0	0:No; 1:Yes	BV38
38	Compressor 3 circuit 2 working hours counter reset	0	0:No; 1:Yes	BV40
39	Ca46 – High pressure pressostat input logic (0=NC; 1=NO)	0	0: Alarm if open;1:Alarm if close	BV42
40	Ca47 – Low pressure pressostat input logic (0=NC; 1=NO)	0	0: Alarm if open;1:Alarm if close	BV43
41	Ca48 – Compressor overload input logic (0=NC; 1=NO)	0	0: Alarm if open;1:Alarm if close	BV44
42	Ca49 – Compressor output logic (0=NO; 1=NC)	0	0: On if close; 1: On if open	BV45
43	Ca50 – Oil equalization solenoid valve circuit 1 output logic	0	0: On if close; 1: On if open	BV46
44	Ca51 – Suction temperature probe type	0	0=NTC; 1=NTC-HT	BV47
45	Ca52 – Discharge temperature probe type	0	0=NTC; 1=NTC-HT	BV48
46	Ca53 – Suction pressure probe type	0	0=0...5V; 1=4...20mA	BV49
47	Ca56 – Discharge pressure probe type	0	0=0...5V; 1=4...20mA	BV50
48	Ca59 – Enable the circuit destabilization function	1	0:Off; 1:On	BV51
49	Ca60 – Enable prevent control for On Off compressors	0	0:Off; 1:On	BV53
50	Ca61 – Enable the oil recovery function	0	0:Off; 1:On	BV52
51	Ca62 – Enable oil equalization function	0	0:Off; 1:On	BV54
52	Cb21 – Enable MOP control in low compression ratio condition	1	0:No; 1:Yes	BV32
53	Cb22 – Speed up mode enable to control zones 5, 6, 7, 8 (to come back into zone 1)	0	0:No; 1:Yes	BV33
54	D017 – PowePlus Save custom config. Command	0	0:No; 1:Yes	BV55
55	Speed profile start mode (0= always; 1=once at run) [022.0]	1	0:Always; 1:Once at run	BV57
56	Speed profile start mode (0=-; 1=force freq. 2) [022.1]	1	0:No; 1:Force freq.2	BV58
57	Disable phase loss algorithm (0=enabled; 1=disabled) [076.0]	0	0:No; 1:Yes	BV59
58	Thermal Overload Retention Enable [076.3]	0	0:No; 1:Yes	BV60
59	D060 – Serial number control enable	0	0:No; 1:Yes	BV61
60	Source pump 1 working hours counter reset	0	0:No; 1:Yes	BV62
61	Source pump 2 working hours counter reset	0	0:No; 1:Yes	BV63
62	Source fan circuit 1 working hours counter reset	0	0:No; 1:Yes	BV67
63	Source fan circuit 2 working hours counter reset	0	0:No; 1:Yes	BV69
64	E016 – Enable low noise function	0	0:No; 1:Yes	BV71
65	E035 – Enable source pump run at minimum power/off	0	0:wait cond.regul.; 1:runs at min speed	BV72
66	E040 – Enable sliding defrost option	0	0:No; 1:Yes	BV73
67	E058 – Source pump overload input logic (0=NO; 1=NC)	0	0: Alarm if open;1:Alarm if close	BV74

68	E059 – Source pump flow input logic (0=NO; 1=NC)	0	0: Alarm if open;1:Alarm if close	BV75
69	E060 – Source fan output logic (0=NC; 1=NO)	0	0: On if close; 1: On if open	BV76
70	E061 – Source pump output logic (0=NO; 1=NC)	0	0: On if close; 1: On if open	BV77
71	E062 – Reverse valve output logic (0=NO; 1=NC)	0	0:Heat if close; 1:Heat if open	BV78
72	E063 – Source analog output type (0=0…10V; 1=PWM)	0	0=0…10V; 1=PWM	BV79
73	E067 – Air flow type (0=Independent; 1=Common)	0	0=Independent; 1=Common	BV66
74	E069 – Source pump type (0=On/Off; 1=Inverter)	0	0=On/Off; 1=Inverter	BV80
75	E070 – Source fan type (0=Inverter, 1=On/Off)	0	0=Inverter, 1=On/Off	BV81
76	E071 – Unit type (0=Air/Water; 1=Water/Water)	0	0=Air/water; 1=Water/water	BV82
77	Ga03 – Update time zone	0	0:No; 1:Yes	BV83
78	E078 – Circuit 1 – Start manually the defrost procedure	0	0: DISATTIVATO; 1: ATTIVATO	BV305
79	E079 – Circuit 2 – Start manually the defrost procedure	0	0: DISATTIVATO; 1: ATTIVATO	BV306
80	C071 – Disable rotation	0	0: No, 1: YES	BV307

7.5.2 Discrete Inputs

(Read only)

Index	Description	Def	Meaning values	BACnet
0	Manual mode active (at least one device in manual mode)	-	0: No; 1: Yes	BV124
1	Condensing temperature probe circuit 1 present	-	0: No; 1: Yes	BV90
2	Free-cooling active	-	0: No; 1: Yes	BV92
3	User flow switch (digital input status)	-	0: Off; 1: On	BV93
4	Source flow switch (digital input status)	-	0: Off; 1: On	BV91
5	Software current version beta	-	0: No; 1: Yes	BV123
6	General alarm	-	0: Off; 1: On	BV94
7	Antifreeze heater	-	0: Off; 1: On	BV95
8	User pump 1 on	-	0: Off; 1: On	BV2
9	User pump 2 on	-	0: Off; 1: On	BV4
10	Source pump 1 on	-	0: Off; 1: On	BV64
11	Source pump 2 on	-	0: Off; 1: On	BV65
12	Reverse valve circuit 1	-	0: Off; 1: On	BV96
13	Oil equalization solenoid valve circuit 1	-	0: Off; 1: On	BV97
14	Compressor 1 circuit 1 status	-	0: Off; 1: On	BV98
15	Compressor 2 circuit 1 status	-	0: Off; 1: On	BV35
16	Compressor 3 circuit 1 status	-	0: Off; 1: On	BV37
17	Source fan circuit 1 on	-	0: Off; 1: On	BV68
18	Reverse valve circuit 2	-	0: Off; 1: On	BV99
19	Oil equalization solenoid valve circuit 2	-	0: Off; 1: On	BV100
20	Compressor 1 circuit 2 status	-	0: Off; 1: On	BV101
21	Compressor 2 circuit 2 status	-	0: Off; 1: On	BV39
22	Compressor 3 circuit 2 status	-	0: Off; 1: On	BV41
23	Source fan circuit 2 on	-	0: Off; 1: On	BV70
24	Unit On/Off by contact (digital input status)	-	0: Off; 1: On	BV102
25	2nd setpoint active	-	0: No; 1: Yes	BV103
26	Unit in heating mode from digital input	-	0: No; 1: Yes	BV104
27	Remote alarm (digital input status)	-	0: No; 1: Yes	BV105
28	User pump 1 overload (digital input status)	-	0: No; 1: Yes	BV106
29	User pump 2 overload (digital input status)	-	0: No; 1: Yes	BV107
30	Source pump 1 overload (digital input status)	-	0: No; 1: Yes	BV108
31	Source pump 2 overload (digital input status)	-	0: No; 1: Yes	BV109
32	Low pressure pressostat circuit 1	-	0: No; 1: Yes	BV110
33	High pressure pressostat circuit 1	-	0: No; 1: Yes	BV111
34	Overload compressor 1 circuit 1 (digital input status)	-	0: No; 1: Yes	BV112
35	Overload compressor 2 circuit 1 (digital input status)	-	0: No; 1: Yes	BV113
36	Overload compressor 3 circuit 1 (digital input status)	-	0: No; 1: Yes	BV114
37	Low pressure pressostat circuit 2	-	0: No; 1: Yes	BV115
38	High pressure pressostat circuit 2	-	0: No; 1: Yes	BV116
39	Overload compressor 1 circuit 2 (digital input status)	-	0: No; 1: Yes	BV117
40	Overload compressor 2 circuit 2 (digital input status)	-	0: No; 1: Yes	BV118
41	Overload compressor 3 circuit 2 (digital input status)	-	0: No; 1: Yes	BV119
42	EVD Evo Display FW compatibility error	-	0: No; 1: Yes	BV122
43	Unit - Prototype alarm	-	0: No; 1: Yes	BV127
44	Unit - Remote alarm	-	0: No; 1: Yes	BV128
45	Unit - Error in the number of retain memory writings	-	0: No; 1: Yes	BV129
46	Unit - Error in retain memory writings	-	0: No; 1: Yes	BV130
47	Unit - User inlet water temperature probe	-	0: No; 1: Yes	BV131
48	Unit - User outlet water temperature probe	-	0: No; 1: Yes	BV132
49	Unit - Source inlet water temperature probe	-	0: No; 1: Yes	BV133
50	Unit - External temperature probe	-	0: No; 1: Yes	BV134
51	Unit - User pump 1 overload	-	0: No; 1: Yes	BV135
52	Unit - User pump 2 overload	-	0: No; 1: Yes	BV136
53	Unit - Source pump 1 overload	-	0: No; 1: Yes	BV137
54	Unit - Source pump 2 overload	-	0: No; 1: Yes	BV138
55	Unit - Flow switch alarm, no flow present with user pump 1 active	-	0: No; 1: Yes	BV139
56	Unit - Flow switch alarm, no flow present with user pump 2 active	-	0: No; 1: Yes	BV140
57	Unit - Flow switch alarm, no flow present with source pump 1 active	-	0: No; 1: Yes	BV141
58	Unit - Flow switch alarm, no flow present with source pump 2 active	-	0: No; 1: Yes	BV142
59	Unit - User pump group alarm	-	0: No; 1: Yes	BV143
60	Unit - Source pump group alarm	-	0: No; 1: Yes	BV144
61	Unit - High chilled water temperature	-	0: No; 1: Yes	BV145
62	Unit - Free-cooling anomaly	-	0: No; 1: Yes	BV146
63	Unit - Slave offline	-	0: No; 1: Yes	BV147
64	Unit - Slave error in the number of retain memory writings	-	0: No; 1: Yes	BV148
65	Unit - Slave error in retain memory writings	-	0: No; 1: Yes	BV149
66	Circuit 1 - Alarm discharge probe pressure	-	0: No; 1: Yes	BV150
67	Circuit 1 - Alarm suction probe pressure	-	0: No; 1: Yes	BV151
68	Circuit 1 - Alarm discharge probe temperature	-	0: No; 1: Yes	BV152
69	Circuit 1 - Alarm suction probe temperature	-	0: No; 1: Yes	BV153
70	Circuit 1 Envelope - High compression ratio	-	0: No; 1: Yes	BV154
71	Circuit 1 Envelope - High discharge pressure	-	0: No; 1: Yes	BV155
72	Circuit 1 Envelope - High motor current	-	0: No; 1: Yes	BV156
73	Circuit 1 Envelope - High suction pressure	-	0: No; 1: Yes	BV157
74	Circuit 1 Envelope - Low compression ratio	-	0: No; 1: Yes	BV158
75	Circuit 1 Envelope - Low differential pressure	-	0: No; 1: Yes	BV159
76	Circuit 1 Envelope - Low discharge pressure	-	0: No; 1: Yes	BV160

77	Circuit 1 Envelope - Low suction pressure	-	0: No; 1: Yes	BV161
78	Circuit 1 Envelope - High discharge temperature	-	0: No; 1: Yes	BV162
79	Circuit 1 EVD - Low SH	-	0: No; 1: Yes	BV163
80	Circuit 1 EVD - LOP	-	0: No; 1: Yes	BV164
81	Circuit 1 EVD - MOP	-	0: No; 1: Yes	BV165
82	Circuit 1 EVD - High condensing temperature	-	0: No; 1: Yes	BV166
83	Circuit 1 EVD - Low suction temperature	-	0: No; 1: Yes	BV167
84	Circuit 1 EVD - Motor error	-	0: No; 1: Yes	BV168
85	Circuit 1 EVD - Emergency closing	-	0: No; 1: Yes	BV169
86	Circuit 1 EVD - Setting out of bound	-	0: No; 1: Yes	BV170
87	Circuit 1 EVD - Settings range error	-	0: No; 1: Yes	BV171
88	Circuit 1 EVD - Offline	-	0: No; 1: Yes	BV172
89	Circuit 1 EVD - Low battery	-	0: No; 1: Yes	BV173
90	Circuit 1 EVD - EEPROM	-	0: No; 1: Yes	BV174
91	Circuit 1 EVD - Incomplete valve closing	-	0: No; 1: Yes	BV175
92	Circuit 1 EVD - Firmware not compatible	-	0: No; 1: Yes	BV176
93	Circuit 1 EVD - Configuration error	-	0: No; 1: Yes	BV177
94	Circuit 1 Inverter - Offline	-	0: No; 1: Yes	BV178
95	Circuit 1 Inverter - Drive overcurrent (01)	-	0: No; 1: Yes	BV179
96	Circuit 1 Inverter - Motor overload (02)	-	0: No; 1: Yes	BV180
97	Circuit 1 Inverter - DC Bus overvoltage (03)	-	0: No; 1: Yes	BV181
98	Circuit 1 Inverter - DC bus undervoltage (04)	-	0: No; 1: Yes	BV182
99	Circuit 1 Inverter - Drive overtemperature (05)	-	0: No; 1: Yes	BV183
100	Circuit 1 Inverter - Drive undertemperature (06)	-	0: No; 1: Yes	BV184
101	Circuit 1 Inverter - HW overcurrent HW (07)	-	0: No; 1: Yes	BV185
102	Circuit 1 Inverter - PTC motor overtemperature (08)	-	0: No; 1: Yes	BV186
103	Circuit 1 Inverter - IGBT module error (09)	-	0: No; 1: Yes	BV187
104	Circuit 1 Inverter - CPU error (10)	-	0: No; 1: Yes	BV188
105	Circuit 1 Inverter - Parameter default (11)	-	0: No; 1: Yes	BV189
106	Circuit 1 Inverter - DC bus ripple (12)	-	0: No; 1: Yes	BV190
107	Circuit 1 Inverter - Data communication fault (13)	-	0: No; 1: Yes	BV191
108	Circuit 1 Inverter - Drive thermistor fault (14)	-	0: No; 1: Yes	BV192
109	Circuit 1 Inverter - Autotuning fault (15)	-	0: No; 1: Yes	BV193
110	Circuit 1 Inverter - Drive disabled (16)	-	0: No; 1: Yes	BV194
111	Circuit 1 Inverter - Motor phase fault (17)	-	0: No; 1: Yes	BV195
112	Circuit 1 Inverter - Internal fan fault (18)	-	0: No; 1: Yes	BV196
113	Circuit 1 Inverter - Speed fault (19)	-	0: No; 1: Yes	BV197
114	Circuit 1 Inverter - PFC module error (20)	-	0: No; 1: Yes	BV198
115	Circuit 1 Inverter - PFC overvoltage (21)	-	0: No; 1: Yes	BV199
116	Circuit 1 Inverter - PFC undervoltage (22)	-	0: No; 1: Yes	BV200
117	Circuit 1 Inverter - STO detection error (23)	-	0: No; 1: Yes	BV201
118	Circuit 1 Inverter - STO detection error (24)	-	0: No; 1: Yes	BV202
119	Circuit 1 Inverter - Ground fault (25)	-	0: No; 1: Yes	BV203
120	Circuit 1 Inverter - ADC conversion sync fault (26)	-	0: No; 1: Yes	BV204
121	Circuit 1 Inverter - HW sync fault (27)	-	0: No; 1: Yes	BV205
122	Circuit 1 Inverter - Drive overload (28)	-	0: No; 1: Yes	BV206
123	Circuit 1 Inverter - Error code (29)	-	0: No; 1: Yes	BV207
124	Circuit 1 Inverter - Unexpected stop (99)	-	0: No; 1: Yes	BV208
125	Circuit 1 BLDC - Starting failure	-	0: No; 1: Yes	BV209
126	Circuit 1 BLDC - Delta pressure greater than the allowable at startup	-	0: No; 1: Yes	BV210
127	Circuit 1 - Source fan 1 overload	-	0: No; 1: Yes	BV211
128	Circuit 1 - Alarm freeze evaporation temperature	-	0: No; 1: Yes	BV212
129	Circuit 1 - Alarm condensing temperature probe	-	0: No; 1: Yes	BV213
130	Circuit 1 - High pressure alarm by pressure switch	-	0: No; 1: Yes	BV214
131	Circuit 1 - Low pressure alarm by pressure switch	-	0: No; 1: Yes	BV215
132	Circuit 1 - Overload compressor 1	-	0: No; 1: Yes	BV216
133	Circuit 1 - Overload compressor 2	-	0: No; 1: Yes	BV217
134	Circuit 1 - Overload compressor 3	-	0: No; 1: Yes	BV218
135	Circuit 1 - Pump-Down end for max time	-	0: No; 1: Yes	BV219
136	Circuit 2 - Alarm discharge probe pressure	-	0: No; 1: Yes	BV220
137	Circuit 2 - Alarm suction probe pressure	-	0: No; 1: Yes	BV221
138	Circuit 2 - Alarm discharge probe temperature	-	0: No; 1: Yes	BV222
139	Circuit 2 - Alarm suction probe temperature	-	0: No; 1: Yes	BV223
140	Circuit 2 Envelope - High compression ratio	-	0: No; 1: Yes	BV224
141	Circuit 2 Envelope - High discharge pressure	-	0: No; 1: Yes	BV225
142	Circuit 2 Envelope - High motor current	-	0: No; 1: Yes	BV226
143	Circuit 2 Envelope - High suction pressure	-	0: No; 1: Yes	BV227
144	Circuit 2 Envelope - Low compression ratio	-	0: No; 1: Yes	BV228
145	Circuit 2 Envelope - Low differential pressure	-	0: No; 1: Yes	BV229
146	Circuit 2 Envelope - Low discharge pressure	-	0: No; 1: Yes	BV230
147	Circuit 2 Envelope - Low suction pressure	-	0: No; 1: Yes	BV231
148	Circuit 2 Envelope - High discharge temperature	-	0: No; 1: Yes	BV232
149	Circuit 2 EVD - Low SH	-	0: No; 1: Yes	BV233
150	Circuit 2 EVD - LOP	-	0: No; 1: Yes	BV234

151	Circuit 2 EVD - MOP	-	0: No; 1: Yes	BV235
152	Circuit 2 EVD - High condensing temperature	-	0: No; 1: Yes	BV236
153	Circuit 2 EVD - Low suction temperature	-	0: No; 1: Yes	BV237
154	Circuit 2 EVD - Motor error	-	0: No; 1: Yes	BV238
155	Circuit 2 EVD - Emergency closing	-	0: No; 1: Yes	BV239
156	Circuit 2 EVD - Setting out of bound	-	0: No; 1: Yes	BV240
157	Circuit 2 EVD - Settings range error	-	0: No; 1: Yes	BV241
158	Circuit 2 EVD - Offline	-	0: No; 1: Yes	BV242
159	Circuit 2 EVD - Low battery	-	0: No; 1: Yes	BV243
160	Circuit 2 EVD - EEPROM	-	0: No; 1: Yes	BV244
161	Circuit 2 EVD - Incomplete valve closing	-	0: No; 1: Yes	BV245
162	Circuit 2 EVD - Firmware not compatible	-	0: No; 1: Yes	BV246
163	Circuit 2 EVD - Configuration error	-	0: No; 1: Yes	BV247
164	Circuit 2 Inverter - Offline	-	0: No; 1: Yes	BV248
165	Circuit 2 Inverter - Drive overcurrent (01)	-	0: No; 1: Yes	BV249
166	Circuit 2 Inverter - Motor overload (02)	-	0: No; 1: Yes	BV250
167	Circuit 2 Inverter - DC Bus overvoltage (03)	-	0: No; 1: Yes	BV251
168	Circuit 2 Inverter - DC bus undervoltage (04)	-	0: No; 1: Yes	BV252
169	Circuit 2 Inverter - Drive overtemperature (05)	-	0: No; 1: Yes	BV253
170	Circuit 2 Inverter - Drive undertemperature (06)	-	0: No; 1: Yes	BV254
171	Circuit 2 Inverter - HW overcurrent HW (07)	-	0: No; 1: Yes	BV255
172	Circuit 2 Inverter - PTC motor overtemperature (08)	-	0: No; 1: Yes	BV256
173	Circuit 2 Inverter - IGBT module error (09)	-	0: No; 1: Yes	BV257
174	Circuit 2 Inverter - CPU error (10)	-	0: No; 1: Yes	BV258
175	Circuit 2 Inverter - Parameter default (11)	-	0: No; 1: Yes	BV259
176	Circuit 2 Inverter - DC bus ripple (12)	-	0: No; 1: Yes	BV260
177	Circuit 2 Inverter - Data communication fault (13)	-	0: No; 1: Yes	BV261
178	Circuit 2 Inverter - Drive thermistor fault (14)	-	0: No; 1: Yes	BV262
179	Circuit 2 Inverter - Autotuning fault (15)	-	0: No; 1: Yes	BV263
180	Circuit 2 Inverter - Drive disabled (16)	-	0: No; 1: Yes	BV264
181	Circuit 2 Inverter - Motor phase fault (17)	-	0: No; 1: Yes	BV265
182	Circuit 2 Inverter - Internal fan fault (18)	-	0: No; 1: Yes	BV266
183	Circuit 2 Inverter - Speed fault (19)	-	0: No; 1: Yes	BV267
184	Circuit 2 Inverter - PFC module error (20)	-	0: No; 1: Yes	BV268
185	Circuit 2 Inverter - PFC overvoltage (21)	-	0: No; 1: Yes	BV269
186	Circuit 2 Inverter - PFC undervoltage (22)	-	0: No; 1: Yes	BV270
187	Circuit 2 Inverter - STO detection error (23)	-	0: No; 1: Yes	BV271
188	Circuit 2 Inverter - STO detection error (24)	-	0: No; 1: Yes	BV272
189	Circuit 2 Inverter - Ground fault (25)	-	0: No; 1: Yes	BV273
190	Circuit 2 Inverter - ADC conversion sync fault (26)	-	0: No; 1: Yes	BV274
191	Circuit 2 Inverter - HW sync fault (27)	-	0: No; 1: Yes	BV275
192	Circuit 2 Inverter - Drive overload (28)	-	0: No; 1: Yes	BV276
193	Circuit 2 Inverter - Error code (29)	-	0: No; 1: Yes	BV277
194	Circuit 2 Inverter - Unexpected stop (99)	-	0: No; 1: Yes	BV278
195	Circuit 2 BLDC - Starting failure	-	0: No; 1: Yes	BV279
196	Circuit 2 BLDC - Delta pressure greater than the allowable at startup	-	0: No; 1: Yes	BV280
197	Circuit 2 - Source fan 1 overload	-	0: No; 1: Yes	BV281
198	Circuit 2 - Alarm freeze evaporation temperature	-	0: No; 1: Yes	BV282
199	Circuit 2 - Alarm condensing temperature probe	-	0: No; 1: Yes	BV283
200	Circuit 2 - High pressure alarm by pressure switch	-	0: No; 1: Yes	BV284
201	Circuit 2 - Low pressure alarm by pressure switch	-	0: No; 1: Yes	BV285
202	Circuit 2 - Overload compressor 1	-	0: No; 1: Yes	BV286
203	Circuit 2 - Overload compressor 2	-	0: No; 1: Yes	BV287
204	Circuit 2 - Overload compressor 3	-	0: No; 1: Yes	BV288
205	Circuit 2 - Pump-Down end for max time	-	0: No; 1: Yes	BV289
206	Save custom config. Command in progress	-	0: No; 1: Yes	BV56
207	PowerPlus circuit 1 - Main supply as three phases	-	0: 1-Phase; 1: 3-Phase	BV120
208	PowerPlus circuit 1 - Three-phase inverter required for compressor	-	0: 1-Phase; 1: 3-Phase	BV121
209	BMS offline	-	0: No; 1: Yes	BV84
210	Fieldbus offline	-	0: No; 1: Yes	BV87
211	Unit - User 1 pump maintenance	-	0: No; 1: Yes	BV290
212	Unit - User 2 pump maintenance	-	0: No; 1: Yes	BV291
213	Unit - Source 1 pump maintenance	-	0: No; 1: Yes	BV292
214	Unit - Source 2 pump maintenance	-	0: No; 1: Yes	BV293
215	Circuit 1 - Compressor 1 maintenance	-	0: No; 1: Yes	BV294
216	Circuit 1 - Compressor 2 maintenance	-	0: No; 1: Yes	BV295
217	Circuit 1 - Compressor 3 maintenance	-	0: No; 1: Yes	BV296
218	Circuit 1 - Source fan 1 maintenance	-	0: No; 1: Yes	BV297
219	Circuit 2 - Compressor 1 maintenance	-	0: No; 1: Yes	BV298
220	Circuit 2 - Compressor 2 maintenance	-	0: No; 1: Yes	BV299
221	Circuit 2 - Compressor 3 maintenance	-	0: No; 1: Yes	BV300
222	Circuit 2 - Source fan 1 maintenance	-	0: No; 1: Yes	BV301

7.5.3 Holding Registers

(Read and write)

Index	Description	Def.	UoM	Range	BACnet
0	BMS power request for regulation (0…1000)	0	-	0…1000	AV220
1	Q001 - Cooling mode setpoint	7.0	°C/°F	-99.9...999.9	AV177
2	Q002 - Heating mode setpoint	40.0	°C/°F	-99.9...999.9	AV179
3	A000 - User pump 1 maintenance hour threshold	99000	h	0...999999	PIV2
5	A001 - User pump 1 manual mode	0	-	0: Auto 1: Off; 2: On	PIV3
6	A002 - User pump 2 maintenance hour threshold	99000	h	0...999999	PIV5
8	A003 - User pump 2 manual mode	0	-	0: Auto 1: Off; 2: On	PIV6
9	A004 - Low limit in mask for the setpoint in cooling	5.0	°C/°F	-99.9...999.9	AV1
10	A005 - High limit in mask for the setpoint in cooling	20.0	°C/°F	A04...999.9	AV2
11	A006 - Low limit in mask for the setpoint in heating	30.0	°C/°F	0.0...999.9	AV3
12	A007 - High limit in mask for the setpoint in heating	45.0	°C/°F	A006...999.9	AV4
13	A008 - Starting temp. for setpoint compensation in Cooling	25.0	°C/°F	-50.0...A009	AV5
14	A009 - Ending temp. for setpoint compensation in Cooling	35.0	°C/°F	A008…200.0	AV6
15	A010 - Max differential temp. for setpoint compensation in Cooling	5.0	°C/°F	0.0…99.9	AV7
16	A011 - Starting temp. for setpoint compensation in Heating	5.0	°C/°F	A009...999.9	AV8
17	A012 - Ending temp. for setpoint compensation in Heating	-5.0	°C/°F	-99.9...A08	AV9
18	A013 - Max. differential temp. for setpoint compensation in Heating	5.0	°C/°F	0.0…99.9	AV10
19	A015 - Scheduler start hour time band	20	h	0…23	IV1
20	A015 - Scheduler start minute time band	0	min	0…59	IV2
21	A016 - Scheduler end hour time band	6	h	0…23	IV3
22	A016 - Scheduler end minute time band	0	min	0…59	IV4
23	A018 - Second setpoint in cooling	10.0	°C/°F	-99.9...999.9	AV11
24	A019 - Second setpoint in heating	35.0	°C/°F	-99.9...999.9	AV12
25	A020 - High water temperature setpoint offset	10.0	°C/°F	0.0…99.9	AV13
26	A021 - High water temperature startup delay	15	min	0…99	PIV7
28	A022 - High water temperature run delay	180	s	0…999	PIV8
30	A024 - Changeover delay time	60	min	0…999	PIV9
31	A026 - Delay time between Startup PID and Run PID	180	s	0…999	IV5
32	A028 - Startup PID proportional band	12.0	°C/°F	0.0...999.9	AV16
33	A029 - Startup PID integral time	180	s	0…999	PIV10
34	A030 - Startup PID derivative time	0	s	0…99	PIV11
35	A031 - Run PID proportional band	10.0	°C/°F	0.0...999.9	AV17
36	A032 - Run PID integral time	120	s	0…999	PIV12
37	A033 - Run PID derivative time	3	s	0…99	PIV13
38	A034 - User pump flow alarm startup delay	10	s	0…999	PIV14
39	A035 - User pump flow alarm run delay	3	s	0…99	PIV15
40	A036 - Compressor delay On since the user pump On	30	s	0…999	PIV16
41	A037 - User pump delay Off since the compressor Off	10	s	0…999	PIV17
42	A038 - User pump rotation time	12	h	0…99	PIV18
43	A039 - Antifreeze user alarm threshold	-0.8	°C/°F	-99.9...999.9	AV18
44	A040 - Antifreeze user alarm differential	30.0	°C/°F	0.0...999.9	AV19
45	A041 - Antifreeze user alarm delay time at 1K below threshold	30	s	0…999	PIV19
46	A042 - Antifreeze (with unit Off) setpoint	4.0	°C/°F	-99.9...999.9	AV20
47	A043 - Antifreeze (with unit Off) differential	2.0	°C/°F	0.0…99.9	AV21
48	A044 - User water inlet probe - Probe offset	0.0	°C/°F	-99.9...99.9	AV23
49	A045 - User water outlet probe - Probe offset	0.0	°C/°F	-99.9...99.9	AV25
50	A057 - Delta temperature to activate free-cooling coil regulation	3.0	°C/°F	-99.9...99.9	AV26
51	A058 - Free-Cooling On-Off hysteresis	1.5	°C/°F	-99.9...99.9	AV27
52	A059 - Free-cooling DT design (to reach unit nominal capacity)	8.0	°C/°F	-99.9...99.9	AV28
53	A060 - Free-cooling type (0=Air; 1=Air remote; 2=Water)	0	-	0: Air;1: Remote air coil; 2: Water	PIV20
54	A061 - Antifreeze type (0=Heater; 1=Pump; 2=Heater-Pump)	2	-	0: Heater; 1: Pumps;2: Heater & pumps	PIV21
55	A064 - User pump number	1	-	1…2	PIV22
56	A065 - Unit type (0=CH; 1=HP; 2=CH/HP)	0	-	0=CH; 1=HP; 2=CH/HP	PIV23
57	B001 - ExV circuit 1 manual mode position steps	0	-	0...9999	IV6
58	B003 - ExV circuit 2 manual mode position steps	0	-	0...9999	IV7
59	B004 - ExV SH setpoint in cooling	6.0	°C/°F	LowSH…180°C (324°K)	AV29
60	B005 - ExV proportional gain SH regulation in cooling	15.0	-	0.0…800.0	AV30
61	B006 - ExV integral time SH regulation in cooling	150.0	s	0.0…1000.0	AV31
62	B007 - ExV derivative time SH regulation in cooling	1.0	s	0.0…800.0	AV32
63	B008 - ExV SH setpoint in heating	6.0	°C/°F	LowSH…180°C (324°K)	AV33
64	B009 - ExV proportional gain SH regulation in heating	15.0	-	0.0…800.0	AV34
65	B010 - ExV integral time SH regulation in heating	150.0	s	0.0…800.0	AV35
66	B011 - ExV derivative time SH regulation in heating	1.0	s	0.0…800.0	AV36
67	B012 - ExV low SH threshold in cooling	1.0	°C/°F	-40°C (-72°K)…SH set	AV37
68	B013 - ExV integral time low SH in cooling	10.0	s	0.0…800.0	AV38
69	B014 - ExV low SH threshold in heating	1.0	°C/°F	-40°C (-72°K)…SH set	AV39
70	B015 - ExV integral time low SH in heating	10.0	s	0.0…800.0	AV40

71	B016 - ExV LOP regulation threshold in cooling	-5.0	°C/°F	-60°C (-76°K)...MOP set	AV41
72	B017 - ExV integral time LOP regulation in cooling	5.0	s	0.0...800.0	AV42
73	B018 - ExV LOP regulation threshold in heating	-50.0	°C/°F	-60°C (-76°K)...MOP set	AV43
74	B019 - EEV integral time LOP regulation in heating	5.0	s	0.0...800.0	AV44
75	B020 - ExV MOP regulation threshold in cooling	30.0	°C/°F	LOP Set...200°C (392°K)	AV45
76	B021 - ExV integral time MOP regulation in cooling	15.0	s	0.0...800.0	AV46
77	B022 - ExV MOP regulation threshold in heating	20.0	°C/°F	LOP Set...200°C (392°K)	AV47
78	B023 - ExV integral time MOP regulation in heating	15.0	s	0.0...800.0	AV48
79	B024 - ExV low SH alarm delay time	300	s	0...9999	IV8
80	B025 - ExV LOP alarm delay time	300	s	0...9999	IV9
81	B026 - ExV MOP alarm delay time	300	s	0...9999	IV10
82	B027 - ExV high condensing temperature threshold	80.0	°C/°F	-60°C (-76°K)...200°C (392°K)	AV49
83	B028 - ExV high condensing temperature integral time	15.0	s	0.0...800.0	AV50
84	B029 - ExV high condensing temperature alarm delay time	300	s	0...9999	IV11
85	B030 - ExV low suction temperature alarm threshold	-50.0	°C/°F	0...9999	AV51
86	B031 - ExV low suction temperature alarm delay time	120	s	0...9999	IV12
87	B032 - ExV startup valve opening % (capacity ratio EVAP / EEV) in cooling	80	%	0...100	IV13
88	B033 - ExV startup valve opening % (capacity ratio EVAP / EEV) in heating	75	%	0...100	IV14
89	B034 - Pump down end temperature threshold	-11.0	°C/°F	-999.9...999.9	AV52
90	B035 - Pump down maximum time duration	15	s	0...999	PIV24
91	B036 - Pump down type	0	-	0:None; 2:At stop; 2:At start; 3:At start & stop	PIV25
92	B037 - ExV regulation delay after power-on	6	s	0...999	IV15
93	B038 - ExV minimum steps custom	50	-	0...9999	IV16
94	B039 - ExV maximum steps custom	480	-	0...9999	IV17
95	B040 - ExV full closing steps custom	500	-	0...9999	IV18
96	B041 - ExV move rate custom	50	Hz	1...2000	IV19
97	B042 - ExV emergency fast close rate custom	50	Hz	1...2000	IV20
98	B043 - ExV move current custom	450	mA	0...800	IV21
99	B044 - ExV hold current custom	100	mA	0...250	IV22
100	B045 - ExV duty cycle custom	30	%	1...100	IV23
102	B050 - ExV valve type (for EVD EVO)	1	-	0:Custom; 1:Carel EXV; 2:Alco EX4; 3:Alco EX5; 4:Alco EX6; 5:Alco EX7; 6:Alco EX8 330HZ; 7:Alco EX8 500Hz; 8:Sporlan SEI 0.5-11; 9:Sporlan SER 1.5-20; 10:Sporlan SEI 30; 11:Sporlan SEI 5; 12:Sporlan SEH 100; 13:Sporlan SEH 175; 14:Danfoss ETS 12.5-25B; 15:Danfoss ETS 50B; 16:Danfoss ETS 100B; 17:Danfoss ETS 250; 18:Danfoss ETS 400; 19:Two Carel EXV; 20:Sporlan SER(I) G, J, K; 21:Danfoss CCM 10-20-30; 22:Danfoss CCM 40	IV25
103	Ca01 - Compressor 1 circuit 1 manual mode		-	0: Auto 1: Off; 2: On	IV26
104	Ca00 - Compressor 1 circuit 1 maintenance hour threshold	30000	h	0...999999	PIV27
106	Ca02 - Compressor 2 circuit 1 maintenance hour threshold	30000	h	0...999999	PIV31
108	Ca03 - Compressor 2 circuit 1 manual mode		-	0: Auto 1: Off; 2: On	IV36
109	Ca04 - Compressor 3 circuit 1 maintenance hour threshold	30000	h	0...999999	PIV33
111	Ca05 - Compressor 3 circuit 1 manual mode		-	0: Auto 1: Off; 2: On	IV37
112	Ca06 - Compressor 1 circuit 2 maintenance hour threshold	30000	h	0...999999	PIV29
114	Ca07 - Compressor 1 circuit 2 manual mode		-	0: Auto 1: Off; 2: On	IV27
115	Ca08 - Compressor 2 circuit 2 maintenance hour threshold	30000	h	0...999999	PIV35
117	Ca09 - Compressor 2 circuit 2 manual mode		-	0: Auto 1: Off; 2: On	IV38
118	Ca10 - Compressor 3 circuit 2 maintenance hour threshold	30000	h	0...999999	PIV37
120	Ca11 - Compressor 2 circuit 2 manual mode		-	0: Auto 1: Off; 2: On	IV39
121	Ca12 - Compressor minimum On time	180	s	0...999	PIV38
122	Ca13 - Compressor minimum Off time	60	s	0...999	PIV39
123	Ca14 - Minimum time between On of same compressor	360	s	0...9999	PIV40
124	Ca15 - Compressor load up time	30	s	0...999	PIV41
125	Ca16 - Compressor load down time	10	s	0...999	PIV42
126	Ca17 - Evaporating minimum temperature custom envelop limit	-25.0	°C/°F	-99.9...999.9	AV82
127	Ca18 - Condensing maximum temperature custom envelop limit	70.0	°C/°F	-9.9...999.9	AV83
128	Ca19 - Low pressure pressostat alarm start delay	10	s	0...99	PIV43
129	Ca20 - Low pressure pressostat alarm run delay	3	s	0...99	PIV44
130	Ca21 - Prevent time between Off for the On/Off compressors	30	s	0...99	PIV45
131	Ca22 - Out of envelope alarm delay time	120	s	0...999	PIV46
132	Ca23 - Circuit destabiliz. max time with one or more comprs Off	240	min	0...999	PIV47
133	Ca24 - Circuit destabiliz. Min. BLDC speed threshold	35.0	rps	0.0...999.9	AV84
134	Ca25 -Oil recovery minimum request for activation	35.0	%	0.0...100.0	AV85
135	Ca26 - Oil recovery minimum compressor speed for activation	35.0	rps	0.0...999.9	AV86
136	Ca27 - Oil recovery delay (compressor running at low speed)	15	min	0...999	PIV48
137	Ca28 -Oil recovery duration (when compressor speed is forced)	3	min	0...999	PIV49
138	Ca29 - Oil recovery compressor speed forced	50.0	rps	0.0...999.9	AV87
139	Ca30 - Oil equalization SV startup time on compressor starts	30	s	0...999	PIV50
140	Ca31 - Oil equalization solenoid valve open time	3	s	0...999	PIV51
141	Ca32 - Oil equalization solenoid valve minimum off time	1	min	0...999	PIV52
142	Ca33 - Oil equalization solenoid valve maximum off time	20	min	0...999	PIV53
143	Ca34 - Oil equalization maximum time for the management	20	min	0...999	PIV54
144	Ca35 - Circuit power distribution	1	-	0:Grouped; 1:Equalized; 2:Group.start - equ.stop	PIV55
145	Ca36 - Discharge temperature probe circuit 1 - Probe offset	0.0	°C/°F	-99.9...99.9	AV89

146	Ca37 - Suction temperature probe circuit 1 - Probe offset	0.0	°C/°F	-99.9...99.9	AV91
147	Ca38 - Discharge temperature probe circuit 2 - Probe offset	0.0	°C/°F	-99.9...99.9	AV93
148	Ca39 - Suction temperature probe circuit 2 - Probe offset	0.0	°C/°F	-99.9...99.9	AV95
149	Ca40 - Condensing temperature probe circuit 1 - Probe offset	0.0	°C/°F	-99.9...99.9	AV98
150	Ca41 - Discharge pressure probe circuit 1 - Probe offset	0.0	bar/psi	-99.9...99.9	AV97
151	Ca42 - Suction pressure probe circuit 1 - Probe offset	0.0	bar/psi	-99.9...99.9	AV100
152	Ca43 - Condensing temperature probe circuit 2 - Probe offset	0.0	°C/°F	-99.9...99.9	AV103
153	Ca44 - Discharge pressure probe circuit 2 - Probe offset	0.0	bar/psi	-99.9...99.9	AV102
154	Ca45 - Suction pressure probe circuit 2 - Probe offset	0.0	bar/psi	-99.9...99.9	AV105
155	Ca54 - Suction pressure probe minimum value	0.0	bar/psi	-99.9...999.9	AV106
156	Ca55 - Suction pressure probe maximum value	17.3	bar/psi	Ca53...999.9	AV107
157	Ca57 - Discharge pressure probe minimum value	0.0	bar/psi	-99.9...999.9	AV108
158	Ca58 - Discharge pressure probe maximum value	45.0	bar/psi	Ca56...999.9	AV109
159	Ca63 - Refrigerant type (only for On/Off compressor units)	4	-	0:R22; 1:R134a; 2:R404A; 3:R407C; 4:R410A; 5:R507A; 6:R290; 7:R600; 8:R600a; 9:R717; 10:R744; 11:R728;12:R1270; 13:R417A; 14:R422D; 15:R413A; 16:R422A; 17:R423A; 18:R407A; 19:R427A; 20: R245FA; 21:R407F; 22:R32; 23:HTR01; 24:HTR02; 25:R23; 26:HFO1234yf; 27: HFO1234ze	PIV56
160	Ca64 - Compressor 1 circuit 1 device power	50.0	%	0.0...100.0	AV110
161	Ca65 - Compressor 2 circuit 1 device power	50.0	%	0.0...100.0	AV111
162	Ca66 - Compressor 3 circuit 1 device power	50.0	%	0.0...100.0	AV112
163	Ca67 - Compressor manufacturer for On/Off compressors	8	-	0:-; 1:BITZER; 2:-; 3:-; 4:-; 5:-; 6:-; 7:COPELAND; 8:DANFOSS	PIV57
164	Ca68 - Compressor model for On/Off compressors	5	-	0:HR/HL/HC mod. U; 1:HR/HL/HC mod. T; 2:HR/HL/HC mod. T; 3:HHP; 4:CXH140; 5:SH; 6:WSH; 7:SZ084-185/SY185; 8:SZ240-380/SY240-300	PIV58
165	Ca69 - Number of circuit in the unit	2	-	1...2	PIV59
166	Ca70 - Compressor used in the circuit	1	-	0:BLDC; 1:BLDC tandem; 2:BLDC trio; 3:1 fixed on off; 4:2 fixed on off; 5:3 fixed on off	PIV60
167	Cb04 - Max. permitted Delta P to start up (bar/psi)	10.0	bar/psi	0.0...15.0	AV55
168	Cb05 - Min. variation of Delta P to considered compressor started	0.3	bar/psi	0.0...2.0	AV56
169	Cb06 - Delay to check increasing DeltaP to validate compr. on	15	s	10...99	IV28
170	Cb07 - Restart delay after a start failure	30	s	1...360	IV29
171	Cb08 - Max Number of starting attempts	5	-	0...9	IV30
172	Cb09 - Start up speed	50.0	rps	20.0...120.0	AV57
173	Cb10 - Max speed custom [rps]	120.0	rps	Cb11...999.9	AV58
174	Cb11 - Min speed custom [rps]	20.0	rps	0.0...99.9	AV59
175	Cb12 - Max. decrease speed rate (in regulation) [rps/s]	1.6	rps/s	0.1...9.9	AV60
176	Cb13 - Max. increase speed rate (in regulation) [rps/s]	1.0	rps/s	0.1...9.9	AV61
177	Cb14 - Decrease max speed rate (= max admitted value, to stop compressor) [rps/s]	2.0	rps/s	0.1...9.9	AV62
178	Cb15 - Envelope control - Decrease speed rate (to come back inside envelope)	0.8	rps/s	0.1...9.9	AV63
179	Cb16 - Min speed permitted to control working point inside envelope	20.0	rps	0.1...99.9	AV64
180	Cb17- Out of envelope alarm delay	60	s	0...32000	IV31
181	Cb18 - Low Delta pressure alarm delay	60	s	0...32000	IV32
182	Cb19 - Suction sat.temp. threshold from zone 1b (max120rps) to zone 1c (max90rps SIAM only)	12.0	°C/°F	0.0...99.9	AV65
183	Cb20 - Max admitted speed in zona 1c (SIAM Scroll only)	90	rps	20...120	IV33
184	Cb23 - Discharge gas temperature control threshold for Zone 1a (SIAM scroll only)	105.0	°C/°F	70.0...350.0	AV66
185	Cb24 - Discharge gas limit temperature for Zone 1a (SIAM Scroll only)	110.0	°C/°F	80.0...350.0	AV67
186	Cb25 - Discharge gas temperature control threshold (SIAM scroll only: for zone 1b)	115.0	°C/°F	70.0...350.0	AV68
187	Cb26 - Discharge gas limit temperature (SIAM Scroll only: for Zone 1b)	120.0	°C/°F	80.0...350.0	AV69
188	Cb27 - Action distance from High Temperature limit (to reduce speed rate)	20.0	°C/°F	10.0...99.9	AV70
189	Cb28 - Pause between speed reductions when discharge temp. is over control limit	90	s	1...300	IV34
190	Cb29 - Speed reduction percentage when discharge temp. is over control limit	3.0	%	0.5...60.0	AV71
191	Cb30 - Regol. Evd SubType: 0=null; 1=SSH; 2=DSH; 3= DLT	1	-	1:Suction SH; 2:Discharge SH; 3:Disch. Temp.	IV35
192	Cb31 - Time constant of discharge temperature sensor	50.0	s	1.0...800.0	AV72
193	Cb32 - SetPoint of Discharge SH (sent to EVD)	35.0	°C/°F	10.0...45.0	AV73
194	Cb33 - Setpoint offset for Discharge Super Heat regulation activation	2.0	°C/°F	0.0...99.9	AV74
195	Cb34 - Hysteresis for Discharge Super Heat regulation deactivation	2.0	°C/°F	0.0...99.9	AV75
196	Cb35 - SetPoint of Discharge Temp (sent to EVD)	105.0	°C/°F	75.0...110.0	AV76
197	Cb36 - Setpoint offset for Discharge Limit Temp. regulation activation	8.0	°C/°F	0.0...99.9	AV77
198	Cb37 - Hysteresis for Discharge Limit Temp. regulation deactivation	5.0	°C/°F	0.0...99.9	AV78
199	Cb38 - Equivalent BLDC speed request threshold to call on it	45.0	rps	0.0...999.9	AV79
200	Cb39 - BDLC speed threshold to call on fixed speed compressor	90.0	rps	0.0...999.9	AV80

201	Cb40 - BDLC speed threshold to switch off fixed speed compressor	30.0	rps	0.0…999.9	AV81
202	Min output frequency [007]	60.0	Hz	0.0…999.9	AV113
203	Max output frequency [006]	360.0	Hz	D000…999.9	AV114
204	Skip frequency: set 1 [010]	0.0	Hz	0.0…999.9	AV115
205	Skip frequency: band 1 [011]	0.0	Hz	0.0…999.9	AV116
206	Skip frequency setpoint 2 [067]	0.0	Hz	0.0…999.9	AV117
207	Skip frequency band 2 [068]	0.0	Hz	0.0…999.9	AV118
208	Skip frequency setpoint 3 [069]	0.0	Hz	0.0…999.9	AV119
209	Skip frequency band 3 [070]	0.0	Hz	0.0…999.9	AV120
210	Switching frequency [024]	1	-	0:4 kHz; 1:6 kHz; 2:8 kHz	PIV61
211	Switching frequency derating [025]	0	-	0:Off; 1:On	PIV62
212	Motor overtemperature alarm (PTC) enable [027]	0	-	0:Off; 1:On	PIV63
213	Motor overtemperature alarm delay [028]	0	s	0…999	PIV64
214	Reverse speed enable [008]	0	-	0:Off; 1:On	PIV65
215	Speed derating mode [009]	0	°C	(0:None)	PIV66
216	Stop mode [033]	1	-	0:Ramp; 1:Coast	PIV67
217	Flying restart [034]	0	-	0:Off; 1:On	PIV68
218	Relay configuration [026]	0	-	0:Alarm; 1:Fan control ;2: Drive OVT alarm; 3:Motor OVT alarm; 4:Motor OVL alarm; 5:Overvolt alarm; 6:Undervolt alarm; 7: Derating; 8:Drive run	PIV69
219	D018 - Motor pole pairs (PowerPlus)	3	-	1:2; 2:4; 3:6; 4:8; 5:10	PIV70
220	Motor control mode [000]	0	-	0:PM; 1: AC vector; 2:AC V/F	PIV71
221	Motor base frequency [001]	360.0	Hz	0.0…999.9	AV121
222	Motor base voltage [002]	277	Vrms	0…999	PIV72
223	Motor rated current [003]	18.0	Arms	0.0…999.9	AV122
224	Motor power factor [004]	100	%	0…100	PIV73
225	Max output current [005]	100.0	%	0.0…200.0	AV123
226	Speed profile: frequency 1 [012]	18.0	Hz	0.0…999.9	AV124
227	Speed profile: frequency 2 [013]	180.0	Hz	0.0…999.9	AV125
228	Speed profile: frequency 3 [014]	180.0	Hz	0.0…999.9	AV126
229	Speed profile: acceleration 1 [015]	18.0	Hz/s	0.0…50.0	AV127
230	Speed profile: acceleration 2 [016]	6.0	Hz/s	0.0…50.0	AV128
231	Speed profile: acceleration 3 [017]	6.0	Hz/s	0.0…50.0	AV129
232	Speed profile: acceleration 4 [018]	6.0	Hz/s	0.0…50.0	AV130
233	Speed profile: delay 1 [019]	0	s	0…999	PIV74
234	Speed profile: delay 2 [020]	180	s	0…999	PIV75
235	Speed profile: delay 3 [021]	0	s	0…999	PIV76
236	Speed profile: deceleration [023]	6.0	Hz/s	0.0…50.0	AV131
237	V/f boost voltage [035]	0.0	%	0.0…25.0	AV132
238	V/f frequency adjustment [036]	0.0	%	0.0…100.0	AV133
239	V/f voltage adjustment [037]	0.0	%	0.0…100.0	AV134
240	Motor magnetizing current [045]	0.0	A	0.0…D022	AV135
241	Stator resistance [046]	300	mohm	0…65535	PIV77
242	Rotor resistance [047]	0	mohm	0…65535	PIV78
243	Stator inductance Ld [048]	3.0	mH	0.0…999.9	AV136
244	Stator inductance Lq [050]	6.0	mH	0.0…999.9	AV137
245	Speed loop Kp [055]	75.0	%	0.1…200.0	AV138
246	Speed loop Ti [056]	100	ms	1…1000	PIV79
247	Magnetizing time [051]	100	ms	0…30000	PIV80
248	Starting current [057]	30.0	%	0.0…100.0	AV140
249	Frequency for starting current [058]	11.7	%	0.0…100.0	AV141
250	D052 - Crank-case heater mode	0	-	0:Auto; 1:Force on; 2:Force off	PIV81
251	Crank-case heater current [065]	0.0	%	0.0…100.0	AV143
252	Safety torque off alarm autoreset on drive stand-by [066]	0	-	0:Man. reset; 1:Auto-reset; 2: Signal only	PIV82
253	Inductance saturation factor [077]	0.0	%	0.0…100.0	AV144
254	Data communication fault timeout [029]	30	s	0…600	PIV83
256	D061 - Compressor model (PowerPlus)	1	-	(see documentation)	PIV84
257	Compressor model (PowerPlus)	-	-	(see documentation)	PIV85
258	D062 - Drive type (PowerPlus)	9	-	0:none; 1:PSD0*122**; 2:PSD0*162**; 3: PSD0*144**; 4:PSD0*244**; 5:PSD1*122**; 6:PSD1*162**; 7:PSD1*102**; 8:PSD1*??2**; 9:PSD1*184**; 10:PSD1*244**; 11:PSD1*354**; 12:PSD1*??4**	PIV86
259	D063 - PowePlus Write default request	0	-	0:No; 1:Yes	IV41
260	E000 - Source pump 1 maintenance hour threshold	99000	h	0….999999	PIV88
262	E001 - Source pump 1 manual mode (0:Aut.;1:0%…;101:100%)	0	-	0: Auto; 1:0%;...101:100%	PIV89
263	E002 - Source pump 2 maintenance hour threshold	99000	h	0….999999	PIV91
265	E003 - Source pump 2 manual mode	0	-	0: Auto; 1:0%;...101:100%	PIV92
266	E004 - Source pump 1 manual mode (0:Aut.;1:Off;2:On)	0	-	0: Auto 1: Off; 2: On	PIV93
267	E005 - Source pump 2 manual mode	0	-	0: Auto 1: Off; 2: On	PIV94
268	E006 - Source fan 1 circuit 1 maintenance hour threshold	99000	h	0….999999	PIV96
270	E007 - Source fan circuit 1 manual mode	0	-	0: Auto; 1:0%;...101:100%	PIV97
271	E008 - Source fan 1 circuit 1 manual mode	0	-	0: Auto 1: Off; 2: On	PIV98
272	E009 - Source fan 1 circuit 1 maintenance hour threshold	99000	h	0….999999	PIV100
274	E010 - Source fan circuit 2 manual mode	0	-	0: Auto; 1:0%;...101:100%	PIV101
275	E011 - Source fan 1 circuit 2 manual mode	0	-	0: Auto 1: Off; 2: On	PIV102
276	E012 - Source fan temperature threshold for cold climates	-5.0	°C/°F	-99.9…99.9	AV149
277	E013 - Source fan minimum speed for cold climates	10.0	%	0.0…100.0	AV150
278	E014 - Source fan speed up speed for cold climates	50.0	%	0.0…100.0	AV151
279	E015 - Source fan speed up time for cold climates	5	s	0…300	PIV103
280	E017 - Low noise start hour time band	22	h	0…23	IV42

281	E017 - Low noise start minute time band	0	min	0…59	IV43
282	E018 - Low noise end hour time band	7	h	0…23	IV44
283	E018 - Low noise end minute time band	0	min	0…59	IV45
284	E019 - Low noise fan setpoint in cooling	45.0	°C/°F	0.0…999.9	AV152
285	E020 - Source pump flow alarm startup delay	10	s	0…999	PIV104
286	E021 - Source pump flow alarm run delay	3	s	0…999	PIV105
287	E022 - Compressor delay On since the source pump On	30	s	0…999	PIV106
288	E023 - Source pump delay Off since the compressor Off	10	s	0…999	PIV107
289	E024 - Source pump rotation time	12	h	0…99	PIV108
290	E025 - Source fan setpoint in chiller mode	30.0	°C/°F	-99.9…999.9	AV153
291	E026 - Source fan setpoint in heatpump mode	10.0	°C/°F	-99.9…999.9	AV154
292	E027 - Source setpoint offset CH	5.0	°C/°F	0.0…99.9	AV155
293	E028 - Source fan setpoint at startup in chiller mode	45.0	°C/°F	0.0…999.9	AV156
294	E029 - Source fan startup delay in chiller mode	240	s	0…999	PIV109
295	E030 - Source setpoint offset HP	3.0	°C/°F	0.0…99.9	AV157
296	E031 - Source fan differential in chiller mode	15.0	°C/°F	0.0…99.9	AV158
297	E032 - Source fan differential in heatpump mode	5.0	°C/°F	0.0…99.9	AV159
298	E033 - Source inverter fan/pump minimum speed	20.0	%	0.0…100.0	AV160
299	E034 - Source inverter fan/pump maximum speed	80.0	%	0.0…100.0	AV161
300	E036 - Defrost start threshold	-1.0	°C/°F	-99.9…99.9	AV162
301	E037 - Defrost start threshold reset	1.0	°C/°F	E036…99.9	AV163
302	E038 - Defrost start delay	30	min	0…99	PIV110
303	E039 - Defrost end threshold	52.0	°C/°F	-99.9…999.9	AV164
304	E041 - Defrost delay time before reverse the 4 way valve	20	s	0…999	PIV111
305	E042 - Defrost delay time after reverse the 4 way valve	10	s	0…999	PIV112
306	E043 - Delay to check for simultaneous defrost	300	min	0…99	PIV113
307	E044 - Defrost minimum duration	1	min	0…99	PIV114
308	E045 - Defrost maximum duration	5	min	0…99	PIV115
309	E046 - Dripping duration	90	s	0…999	PIV116
310	E047 - Post dripping duration	30	s	0…999	PIV117
311	E048 - Delay between defrosts	20	min	0…999	PIV118
312	E049 - BLDC maximum speed in defrost	80.0	rps	0.0…999.9	AV165
313	E050 - BLDC minimum speed in defrost	40.0	rps	0.0…999.9	AV166
314	E051 - Defrost synchronization type (0=Independent; 1=Separated; 2=Simultaneous)	0	-	0:Indipendent; 1:Separated; 2:Simultaneous	PIV119
315	E052 - Delta pressure to reverse the 4 way valve	3.0	bar	0.0…999.9	AV167
316	E053 - Antifreeze source alarm threshold	-0.8	°C/°F	-99.9…999.9	AV168
317	E054 - Antifreeze source alarm differential	30.0	°C/°F	0.0…999.9	AV169
318	E055 - Antifreeze source alarm delay time at 1K below threshold	60	s	0…999	PIV120
319	E056 - External air temperature - Probe offset	0.0	°C/°F	-99.9…99.9	AV171
320	E057 - Source water inlet probe - Probe offset	0.0	°C/°F	-99.9…99.9	AV173
321	E064 - PWM minimum phase delay	7.0	%	0.0…100.0	AV174
322	E065 - PWM maximum phase delay	92.0	%	0.0…100.0	AV175
323	E066 - PWM pulse width time	2.5	ms	0.0…10.0	AV176
324	E068 - Number of source pumps	1	-	1…2	PIV121
325	Ga00 - Date format	0	-	0:dd/mm/yy; 1:mm/dd/yy; 2:yy/mm/dd	IV46
326	Ga01 - Writing of new day value enabled by EnDate	0	-	1…31	PIV122
327	Ga01 - Writing of new month value enabled by EnDate	0	-	1…12	PIV123
328	Ga01 - Writing of new year value enabled by EnDate	0	-	0…99	PIV124
329	Ga02 - Writing of new Hour value enabled by EnDate	0	-	0…24	PIV125
330	Ga02 - Writing of new minute value enabled by EnDate	0	-	0…59	PIV126
331	Ga02 - Writing of new seconds value enabled by EnDate	0	-	0…59	PIV127
332	Ga03 - World time zone	1	-	0…83	PIV129
333	Gb00 - Unit of measure used in BMS	6	-	1:SI(°C,KPa); 2:USA(°F,Psi); 3:UK(°F,Psi); 4:CAN(°C,Psi); 5:LON: 6:SI(°C,Bar)	PIV145

335	Gd00 - Configurable universal input U3	1	-	0:Discharge temp.; 1:Source temp.	IV50
336	Gd01 - Configurable universal input U4	0	-	0:Discharge press.; 1:Condensing temp.	IV51
337	Gd02 - Configurable universal input U8	5	-	0:Ovld comp.1; 1:Ovld comp.2; 2:Ovld user pump; 3:Ovld source pump; 4:Source pump flow; 5:Cool/heat; 6:2°setp.; 7:Unit on/off; 8:Remote alarm	IV52
338	Gd03 - Configurable universal input U9	6	-	0:Ovld comp.1; 1:Ovld comp.2; 2:Ovld user pump; 3:Ovld source pump; 4:Source pump flow; 5:Cool/heat; 6:2°setp.; 7:Unit on/off; 8:Remote alarm	IV53
339	Gd04 - Configurable universal input U10	7	-	0:Ovld comp.1; 1:Ovld comp.2; 2:Ovld user pump; 3:Ovld source pump; 4:Source pump flow; 5:Cool/heat; 6:2°setp.; 7:Unit on/off; 8:Remote alarm	IV54
340	Ge00 - BMS address	1	-	1...247	PIV130
342	Ge01 - BMS baudrate (0=4800; 1=9600; 2=19200; 3=38400)	2	-	0:4800; 1:9600; 2:19200; 3: 38400	IV47
343	Ge02 - BMS parity (0=None; 1=Odd; 2=Even)	0	-	0:None; 1:Odd; 2: Even	PIV131
344	Ge03 - BMS stopbit	2	-	1...2	PIV132
345	Ge04 - Fieldbus address	150	-	1...247	PIV133
347	Ge05 - Fieldbus baudrate (0=4800; 1=9600; 2=19200; 3=38400)	2	-	0:4800; 1:9600; 2:19200; 3: 38400	IV48
348	Ge06 - Fieldbus parity (0=None; 1=Odd; 2=Even)	0	-	0:None; 1:Odd; 2: Even	PIV134
349	Ge07 - Fieldbus stopbit	2	-	1...2	PIV135
350	Ge08 - Slave address	150	-	1...247	PIV136
352	Ge09 - Slave baudrate (0=4800; 1=9600; 2=19200; 3=38400)	2	-	0:4800; 1:9600; 2:19200; 3: 38400	IV49
353	Ge10 - Slave parity (0=None; 1=Odd; 2=Even)	0	-	0:None; 1:Odd; 2: Even	PIV137
354	Ge11 - Slave stopbit	2	-	1...2	PIV138
355	Ge12 - PowerPlus address circuit 1	1	-	1...247	PIV139
357	Ge13 - PowerPlus address circuit 2	3	-	1...247	PIV140
359	Ge14 - Modbus communication timeout [ms]	200	ms	0...999	PIV141
361	Ge15 - Modbus command delay [ms]	40	ms	0...9999	PIV142
363	Ge16 - Address Base [032]	1	-	1...233	PIV143
364	Ge18 - Address Base [032]	1	-	1...233	PIV144
365	E075 - Defrost high pressure threshold checking	1	bar/psi	0.0...200.0	AV302
366	E076 - Compressor behavior in the post-defrost phase	1	-	0: The compressor is Off, 1: The compressor is turned On	BV303
367	E077 - Defrost duration of smart start function [s]	1	s	0...999	PIV304
368	B053 - EVD type (0: EVD Embedded; 1: EVDEVO)	0	-	0: UNIPOLAR (EVDEmb)...1: BIPOLAR (EVDEVO)	PIV307
369	Demand limit in percentage	100.0	%	0.0....100.0	AV309
371	Minimum inverter compressor capacity (0-1000)	10	%	0...100	IV310
372	Maximum inverter compressor capacity (0-1000)	100	%	0...100	IV311

7.5.4 Input Register

(Read only)

Index	Description	Def.	UoM	Range	BACnet
0	Unit status	-	-	1:Std-by;2:Off by alarm;3:Off by bms;4:Off by sched; 5:Off by din;6:Off by keyboard;7:Off by chg-over; 8:Freecooling;9:Comp on;10:Defrost;11:Shutting-down	PIV197
1	Direct expansion power request in tenths (100%=1000)	-	%	0.0…100.0	AV180
2	Power run circuit 1	-	%	0.0…100.0	AV181
3	Discharge pressure probe circuit 1	-	bar/psi	-99.9…999.9	AV96
4	Condensing temperature probe circuit 1	-	°C/°F	-99.9…999.9	AV182
5	Discharge temperature probe circuit 1	-	°C/°F	-99.9…999.9	AV88
6	Warning BLDC circuit 1 (1: DP >max; 2: Start fail)	-	-	1: DP >max; 2: Start fail	PIV146
7	Envelope zone circuit 1	-	-	1:Ok;2:HiCRatio;3:HiCondP;4:HiCur;5:HiEvapP;6:LowCratio;7.LowDp;8:LowCondP;9:LowEvapP	IV55
8	Circuit 1 envelope alarm countdown	-	s	0…9999	IV56
9	Suction temperature circuit 1	-	°C/°F	-99.9…999.9	AV90
10	Suction pressure circuit 1	-	bar/psi	-99.9…999.9	AV99
11	Evaporating temperature circuit 1	-	°C/°F	-99.9…999.9	AV183
12	PowerPlus circuit 1 - Current rotor speed [rps]	-	rps	0…999	AV184
13	Compressor 1 circuit 1 status	-	-	0:Off; 1:Off (s); 2:On; 3:On (s); 4:Man ON; 5:Man OFF; 6:Frcd OFF; 7:Defr; 8:PmpD; 9:Prev; 10:Alrm	PIV147
14	Compressor 1 circuit 1 count down for next action	-	s	0…9999	PIV148
15	Compressor 2 circuit 1 status	-	-	0:Off; 1:Off (s); 2:On; 3:On (s); 4:Man ON; 5:Man OFF; 6:Frcd OFF; 7:Defr; 8:PmpD; 9:Prev; 10:Alrm	PIV149
16	Compressor 2 circuit 1 count down for next action	-	s	0…9999	PIV150
17	Compressor 3 circuit 1 status	-	-	0:Off; 1:Off (s); 2:On; 3:On (s); 4:Man ON; 5:Man OFF; 6:Frcd OFF; 7:Defr; 8:PmpD; 9:Prev; 10:Alrm	PIV151
18	Compressor 3 circuit 1 count down for next action	-	s	0…9999	PIV152
19	Circuit 1 EVD embedded current opening value %	-	%	0…100	AV185
20	Circuit 1 EVD embedded current opening steps	-	-	0…9999	IV57
21	EVD circuit 1 status	-	-	1-2:Close; 3:Off; 4-5:Pos; 6:Wait; 7-12:On; 13:Pos; 14:Init; 15:-;16: Pos;17…21;-; 22:LoSH; 23:LOP; 24:MOP; 25:HiTc	IV58
22	EVD circuit 1 current set point	-	°C/°F	-99.9…999.9	AV186
23	Suction superheat circuit 1	-	°C/°F	-99.9…999.9	AV187
24	Discharge superheat circuit 1	-	°C/°F	-99.9…999.9	AV188
25	EVD regulation sub type circuit 1	-	-	1:Suct.SH;2:Disch.SH;3:Disch.Temp.	IV59
26	EVD Evo ExV current opening % circuit 1	-	%	0.0…100.0	AV189
27	EVD Evo ExV current opening steps circuit 1	-	n	0…9999	IV60
28	EVD Evo status circuit 1	-	-	1-2:Close; 3:Off; 4-5:Pos; 6:Wait; 7-12:On; 13:Pos; 14:Init; 15:-;16: Pos;17…21;-; 22:LoSH; 23:LOP; 24:MOP; 25:HiTc	IV70
29	EVD Evo current SH setpoint circuit 1	-	°C/°F	-99.9…999.9	AV190
30	External air temperature	-	°C/°F	-99.9…999.9	AV170
31	Source fan status circuit 1	-	-	0:Off;1;On;2:Speed-up;3:Forced by def.;4:Force by prev.;5:Anti-frost; 6:Freecooling; 7:Manual;8:Defrost; 9:Dripping;10:Post-dripping	PIV153
32	Source current set point circuit 1	-	°C/°F	-99.9…999.9	AV191
33	Inverter request source fan circuit 1	-	-	0…1000	AV147
34	Power run circuit 2	-	%	0.0…100.0	AV192
35	Discharge pressure probe circuit 2	-	bar/psi	-99.9…999.9	AV101
36	Condensing temperature probe circuit 2	-	°C/°F	-99.9…999.9	AV193
37	Discharge temperature probe circuit 2	-	°C/°F	-99.9…999.9	AV92
38	Warning BLDC circuit 2 (1: DP >max; 2: Start fail)	-	-	1: DP >max; 2: Start fail	PIV154
39	Envelope zone circuit 2	-	-	1:Ok;2:HiCRatio;3:HiCondP;4:HiCur;5:HiEvapP;6:LowCratio;7.LowDp;8:LowCondP;9:LowEvapP	IV61
40	Circuit 2 envelope alarm countdown	-	s	0…9999	IV62
41	Suction temperature circuit 2	-	°C/°F	-99.9…999.9	AV94
42	Suction pressure circuit 2	-	bar/psi	-99.9…999.9	AV104
43	Evaporating temperature circuit 2	-	°C/°F	-99.9…999.9	AV194

44	PowerPlus circuit 2 - Current rotor speed [rps]	-	rps	0…999	AV195
45	Compressor 1 circuit 2 status	-	-	0:Off; 1:Off (s); 2:On; 3:On (s); 4:Man ON; 5:Man OFF; 6:Frcd OFF; 7:Defr; 8:PmpD; 9:Prev; 10:Alrm	PIV155
46	Compressor 1 circuit 2 count down for next action	-	s	0…9999	PIV156
47	Compressor 2 circuit 2 status	-	-	0:Off; 1:Off (s); 2:On; 3:On (s); 4:Man ON; 5:Man OFF; 6:Frcd OFF; 7:Defr; 8:PmpD; 9:Prev; 10:Alrm	PIV157
48	Compressor 2 circuit 2 count down for next action	-	s	0…9999	PIV158
49	Compressor 3 circuit 2 status	-	-	0:Off; 1:Off (s); 2:On; 3:On (s); 4:Man ON; 5:Man OFF; 6:Frcd OFF; 7:Defr; 8:PmpD; 9:Prev; 10:Alrm	PIV159
50	Compressor 3 circuit 2 count down for next action	-	s	0…9999	PIV160
51	Circuit 2 EVD embedded current opening value %	-	%	0…100	AV196
52	Circuit 2 EVD embedded current opening steps	-	-	0…9999	IV63
53	EVD circuit 2 status	-	-	1-2:Close; 3:Off; 4-5:Pos; 6:Wait; 7-12:On; 13:Pos; 14:Init; 15:-;16: Pos;17…21;-; 22:LoSH; 23:LOP; 24:MOP; 25:HiTc	IV64
54	EVD circuit 2 current set point	-	°C/°F	-99.9…999.9	AV197
55	Suction superheat circuit 2	-	°C/°F	-99.9…999.9	AV198
56	Discharge superheat circuit 2	-	°C/°F	-99.9…999.9	AV199
57	EVD regulation sub type circuit 2	-	-	1:Suct.SH;2:Disch.SH;3:Disch.Temp.	IV65
58	EVD Evo ExV current opening % circuit 2	-	%	0.0…100.0	AV200
59	EVD Evo ExV current opening steps circuit 2	-	n	0…9999	IV66
60	EVD Evo status circuit 2	-	-	1-2:Close; 3:Off; 4-5:Pos; 6:Wait; 7-12:On; 13:Pos; 14:Init; 15:-;16: Pos;17…21;-; 22:LoSH; 23:LOP; 24:MOP; 25:HiTc	IV71
61	EVD Evo current SH setpoint circuit 2	-	°C/°F	-999.9…999.9	AV201
62	Source fan status circuit 2	-	-	0:Off;1;On;2:Speed-up;3:Forced by def.;4:Force by prev.;5:Anti-frost; 6:Freecooling; 7:Manual;8:Defrost; 9:Dripping;10:Post-dripping	PIV161
63	Source current set point circuit 2	-	°C/°F	-99.9…999.9	AV202
64	Inverter request source fan circuit 2	-	-	0…1000	AV148
65	Source water inlet probe	-	°C/°F	-99.9…999.9	AV172
66	Free-cooling regulation ramp	-	%	0.0…100.0	AV203
67	User pump active (1 or 2)	-	n	1…2	IV68
68	User water outlet probe	-	°C/°F	-99.9…999.9	AV24
69	User water inlet probe	-	°C/°F	-99.9…999.9	AV22
70	Actual setpoint	-	°C/°F	-99.9…99.9	AV178
71	Power request processed (without free-cooling)	-	-	0…1000	AV204
72	Source pump active (1 or 2)	-	n	1…2	IV67
73	Free-cooling modulating signal output	-	-	0…1000	AV205
74	User pump 1 analog output	-	-	0…1000	AV206
75	User pump 2 analog output	-	-	0…1000	AV207
76	Source pump 1 analogue output	-	-	0…1000	AV208
77	Source pump 2 analogue output	-	-	0…1000	AV209
78	Source fan circuit 1 analog output value	-	-	0…1000	AV210
79	Source fan circuit 2 analog output value	-	-	0…1000	AV211
80	PowerPlus circuit 1 - Drive status	-	-	0:Stop;1: Run;2:Alarm;3:Heating;4:DCReady	PIV162
81	PowerPlus circuit 1 - Current motor current [A]	-	A	0…99.9	AV212
82	PowerPlus circuit 1 - Current motor voltage [V]	-	V	0…999	PIV163
83	PowerPlus circuit 1 - Current motor consumption [kW]	-	kW	0…99.9	AV213
84	Circuit 1 - Power plus DC bus voltage	-	V	0…999	PIV164
85	Circuit 1 - Power plus DC bus ripple	-	V	0…999	PIV165
86	PowerPlus circuit 1 - Drive temperature	-	°C/°F	-99.9…999.9	AV214
87	PowerPlus circuit 2 - Drive status	-	-	0:Stop;1: Run;2:Alarm;3:Heating;4:DCReady	PIV166
88	PowerPlus circuit 2 - Current motor current [A]	-	A	0…99.9	AV215
89	PowerPlus circuit 2 - Current motor voltage [V]	-	V	0…999	PIV167
90	PowerPlus circuit 2 - Current motor consumption [kW]	-	kW	0…99.9	AV216
91	Circuit 2 - Power plus DC bus voltage	-	V	0…999	PIV168
92	Circuit 2 - Power plus DC bus ripple	-	V	0…999	PIV169
93	PowerPlus circuit 2 - Drive temperature	-	°C/°F	-99.9…999.9	AV217
94	EVD Evo Display FW release	-	-	0…32767	IV69
95	Board type	-	-	12:c.pCO; 13:uPC; 14:c.pCO mini	PIV171
97	Board size	-	-	10:Large; 11:Medium; 12:Small; 13:XL; 20:Basic; 21:Enhanced; 22:High End	PIV172
99	Controller board temperature	-	°C/°F	-99.9…999.9	PIV198
101	Number of writings in permanent memory	-	n	0…9999999	PIV173

103	Program cycle duration [ms]	-	ms	0…9999	PIV174
104	Program speed [cycles/s]	-	Hz	0.0..99.9	AV219
105	Actual day	-	-	1…31	PIV177
106	Actual month	-	-	1…12	PIV178
107	Actual hour	-	-	0…23	PIV179
108	Actual minute	-	-	0…59	PIV180
109	Actual second	-	-	0…59	PIV181
110	Saving of last day before blackout	-	-	1…31	PIV182
111	Saving of last month before blackout	-	-	1…12	PIV183
112	Saving of last year before blackout	-	-	0…99	PIV184
113	Saving of last hour before blackout	-	-	0…23	PIV185
114	Saving of last minute before blackout	-	-	0…59	PIV186
115	Saving of last second before blackout	-	-	0…59	PIV187
116	Number of days since the last blackout	-	-	0…999	PIV188
117	Number of hours since the last blackout	-	-	0…23	PIV189
118	Numbers of minutes since the last blackout	-	-	0…59	PIV190
119	Software current version X	-	-	0…9	PIV191
120	Software current version Y	-	-	0…9	PIV192
121	Software current version Z	-	-	0…999	PIV193
122	OS version X	-	-	0…9	PIV194
124	OS version Y	-	-	0…9	PIV195
126	OS version Z	-	-	0…999	PIV196
128	User pump 1 working hours	-	h	0...999999	PIV1
130	User pump 2 working hours	-	h	0...999999	PIV4
132	Water temperature used by PID regulator	-	°C/°F	-99.9...999.9	AV14
133	Power request from thermoregulation (0-1000)	-	-	0…1000	AV15
134	Compressor 1 circuit 1 working hours	-	h	0...999999	PIV26
136	Compressor 2 circuit 1 working hours	-	h	0...999999	PIV30
138	Compressor 3 circuit 1 working hours	-	h	0...999999	PIV32
140	Compressor 1 circuit 2 working hours	-	h	0...999999	PIV28
142	Compressor 2 circuit 2 working hours	-	h	0...999999	PIV34
144	Compressor 3 circuit 2 working hours	-	h	0...999999	PIV36
146	Refrigerant gas type	-	-	0:R22; 1:R134a; 2:R404A; 3:R407C; 4:R410A; 5:R507A; 6:R290; 7:R600; 8:R600a; 9:R717; 10:R744;	IV40
				11:R728;12:R1270; 13:R417A; 14:R422D; 15:R413A; 16:R422A; 17:R423A; 18:R407A; 19:R427A; 20: R245FA; 21:R407F; 22:R32; 23:HTR01; 24:HTR02; 25:R23; 26:HFO1234yf; 27: HFO1234ze	
147	PowerPlus circuit 1 - Current rotor speed [%]	-	%	0.0…100.0	AV53
148	PowerPlus circuit 2 - Current rotor speed [%]	-	%	0.0…100.0	AV54
149	PowerPlus circuit 1 - Rated starting current	-	A	0.0…99.9	AV139
150	PowerPlus circuit 1 - Rated crankcase heating current	-	A	0.0…99.9	AV142
151	Source pump 1 working hours	-	h	0...999999	PIV87
153	Source pump 1 inverter request	-	-	0…1000	AV145
154	Source pump 2 working hours	-	h	0...999999	PIV90
156	Source pump 2 inverter request	-	-	0…1000	AV146
157	Source fan circuit 1 working hours	-	h	0...999999	PIV95
159	Source fan circuit 2 working hours	-	h	0...999999	PIV99
161	Day of the week	-	-	1:Mon…7 :Sun	PIV128
162	PowerPlus circuit 1 - Device rated current [AA.a]	-	A	0…99	AV218
163	PowerPlus circuit 1 - Rated current of compressor	-	A	0…99	PIV170
164	Polling time [ms]	-	ms	0…9999	PIV175
166	Polling number	-	Cycles/s	0…999.9	PIV176
168	Ge17 - Deepswitch Addr. [121]	-	-	0...15	PIV199
169	Ge19 - Deepswitch Addr. [121]	-	-	0...15	PIV200

7.6 ALARMS

7.6.1 Alarms Interface

7.6.1.1 Alarms screen and LEDs

Pressing the ALARM key can occur in two different situations - no alarm or an alarm present.

If there is no alarm, the following screen is displayed:

This screen makes it possible to easily enter the alarms log using the ENTER key.

If there is at least one alarm, the alarms screen is displayed sorted by alarm code from lesser to greater.

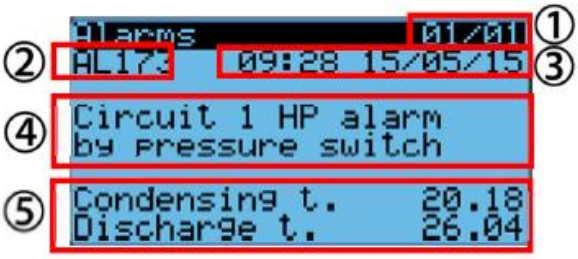

Each alarm contains the information needed to understand the cause of the alarm.

The information available on the screen is shown below:

1. Alarm number/total alarms;
2.Unique alarm code;
3. Alarm date and time;
4. Long alarm description;
5. Value of the probes linked to the alarm;

In every alarm screen, the alarms log can be displayed by pressing ENTER.

The red LED under the ALARM button can be:

- Off: do not activate alarm;
- Flashing: there is at least one active alarm and the display shows a screen that is not part of the alarms loop.
- On: there is at least one active alarms and a screen that is part of the alarms loop is displayed.

7.6.1.2 Alarms Log

From the main menu, entering the Alarms Log menu allows access to the following alarms log display screen.

7.6.2 Alarms Table

Code	Description	Reset	Action	Delay
AL000	Unit - Prototype alarm	A	Switch the unit Off	30days
AL001	Unit - Remote alarm	M	Switch the unit Off	No
AL002	Unit - Error in the number of retain memory writings	M	None	No
AL003	Unit - Error in retain memory writings	M	None	No
AL004	Unit - User inlet water temperature probe	A	Switch the unit Off	10s
AL005	Unit - User outlet water temperature probe	A	Switch the unit Off	10s
AL006	Unit - Source inlet water temperature probe	A	None	10s
AL007	Unit - External temperature probe	A	FC OFF, compensation Off	10s
AL008	Unit - User pump 1 overload [1]	M	None	No
AL009	Unit - User pump 2 overload [1]	M	None	No
AL010	Unit - Source pump 1 overload [1]	M	None	No
AL011	Unit - Source pump 2 overload [1]	M	None	No
AL012	Unit - Flow switch alarm with user pump 1 active [1]	M	Switch the unit Off	Parameter A034/A035
AL013	Unit - Flow switch alarm with user pump 2 active [1]	M	Switch the unit Off	Parameter A034/A035
AL014	Unit - Flow switch alarm with source pump 1 active [1]	M	None	Parameter E020/E021
AL015	Unit - Flow switch alarm with source pump 2 active [1]	M	None	Parameter E020/E021
AL016	Unit - User pump group alarm	M	Switch the unit Off	No
AL017	Unit - Source pump group alarm	M	None	No
AL018	Unit - User 1 pump maintenance	A	None	Parameter A00
AL019	Unit - User 2 pump maintenance	A	None	Parameter A02
AL020	Unit - Source 1 pump maintenance	A	None	Parameter E00
AL021	Unit - Source 2 pump maintenance	A	None	Parameter E02
AL022	Unit - High chilled water temperature	A	None	Parameter A021/A022
AL023	Unit - Free-cooling anomaly	M	None	Parameter A021/180s
AL024	Unit - Slave offline	A	None	No
AL025	Unit - Slave error in the number of retain memory writings	M	None	No
AL026	Unit - Slave error in retain memory writings	M	None	No
AL100	Circuit 1 - Alarm discharge probe pressure	A	Stop circuit 1	10s
AL101	Circuit 1 - Alarm suction probe pressure	A	Stop circuit 1	10s
AL102	Circuit 1 - Alarm discharge probe temperature	A	Stop circuit 1	10s [2]
AL103	Circuit 1 - Alarm suction probe temperature	A	Stop circuit 1	10s
AL105	Circuit 1 Envelope - High compression ratio	A	Stop circuit 1	Parameter Cb17
AL106	Circuit 1 Envelope - High discharge pressure	M	Stop circuit 1	Parameter Cb17
AL107	Circuit 1 Envelope - High motor current	A	Stop circuit 1	Parameter Cb17
AL108	Circuit 1 Envelope - High suction pressure	A	Stop circuit 1	Parameter Cb17
AL109	Circuit 1 Envelope - Low compression ratio	A	Stop circuit 1	Parameter Cb17
AL110	Circuit 1 Envelope - Low differential pressure	A	Stop circuit 1	Parameter Cb18
AL111	Circuit 1 Envelope - Low discharge pressure	A	Stop circuit 1	Parameter Cb17
AL112	Circuit 1 Envelope - Low suction pressure	A	Stop circuit 1	Parameter Cb17
AL113	Circuit 1 Envelope - High discharge temperature	A	Stop circuit 1	Parameter Cb17
AL114	Circuit 1 EVD - Low SH	M	Stop circuit 1	Parameter B024
AL115	Circuit 1 EVD - LOP	A	Stop circuit 1	Parameter B025
AL116	Circuit 1 EVD - MOP	A	Stop circuit 1	Parameter B026
AL117	Circuit 1 EVD - High condensing temperature	A	Stop circuit 1	Parameter B029
AL118	Circuit 1 EVD - Low suction temperature	A	Stop circuit 1	Parameter B031
AL119	Circuit 1 EVD - Motor error	M	Stop circuit 1	No
AL120	Circuit 1 EVD - Emergency closing	A	Stop circuit 1	No
AL121	Circuit 1 EVD - Setting out of bound	A	Stop circuit 1	No
AL122	Circuit 1 EVD - Settings range error	A	None	No
AL123	Circuit 1 EVD - Offline	A	Stop circuit 1	No
AL124	Circuit 1 EVD - Low battery	A	None	No
AL125	Circuit 1 EVD - EEPROM	A	None	No

AL126	Circuit 1 EVD - Incomplete valve closing	A	Stop circuit 1	No
AL127	Circuit 1 EVD - Firmware not compatible	A	Stop circuit 1	No
AL128	Circuit 1 EVD - Configuration error	A	Stop circuit 1	No
AL129	Circuit 1 Inverter - Offline	A	Stop circuit 1 BLDC	30s
AL130	Circuit 1 Inverter - Drive overcurrent (01)	R	Stop circuit 1 BLDC	No
AL131	Circuit 1 Inverter - Motor overload (02)	R	Stop circuit 1 BLDC	No
AL132	Circuit 1 Inverter - DC Bus overvoltage (03)	R	Stop circuit 1 BLDC	No
AL133	Circuit 1 Inverter - DC bus undervoltage (04)	R	Stop circuit 1 BLDC	No
AL134	Circuit 1 Inverter - Drive overtemperature (05)	R	Stop circuit 1 BLDC	No
AL135	Circuit 1 Inverter - Drive undertemperature (06)	R	Stop circuit 1 BLDC	No
AL136	Circuit 1 Inverter - HW overcurrent HW (07)	R	Stop circuit 1 BLDC	No
AL137	Circuit 1 Inverter - PTC motor overtemperature (08)	R	Stop circuit 1 BLDC	No
AL138	Circuit 1 Inverter - IGBT module error (09)	R	Stop circuit 1 BLDC	No
AL139	Circuit 1 Inverter - CPU error (10)	R	Stop circuit 1 BLDC	No
AL140	Circuit 1 Inverter - Parameter default (11)	R	Stop circuit 1 BLDC	No
AL141	Circuit 1 Inverter - DC bus ripple (12)	R	Stop circuit 1 BLDC	No
AL142	Circuit 1 Inverter - Data communication fault (13)	R	Stop circuit 1 BLDC	No
AL143	Circuit 1 Inverter - Drive thermistor fault (14)	R	Stop circuit 1 BLDC	No
AL144	Circuit 1 Inverter - Autotuning fault (15)	R	Stop circuit 1 BLDC	No
AL145	Circuit 1 Inverter - Drive disabled (16)	R	Stop circuit 1 BLDC	No
AL146	Circuit 1 Inverter - Motor phase fault (17)	R	Stop circuit 1 BLDC	No
AL147	Circuit 1 Inverter - Internal fan fault (18)	R	Stop circuit 1 BLDC	No
AL148	Circuit 1 Inverter - Speed fault (19)	R	Stop circuit 1 BLDC	No
AL149	Circuit 1 Inverter - PFC module error (20)	R	Stop circuit 1 BLDC	No
AL150	Circuit 1 Inverter - PFC overvoltage (21)	R	Stop circuit 1 BLDC	No
AL151	Circuit 1 Inverter - PFC undervoltage (22)	R	Stop circuit 1 BLDC	No
AL152	Circuit 1 Inverter - STO detection error (23)	R	Stop circuit 1 BLDC	No
AL153	Circuit 1 Inverter - STO detection error (24)	R	Stop circuit 1 BLDC	No
AL154	Circuit 1 Inverter - Ground fault (25)	R	Stop circuit 1 BLDC	No
AL155	Circuit 1 Inverter - ADC conversion sync fault (26)	R	Stop circuit 1 BLDC	No
AL156	Circuit 1 Inverter - HW sync fault (27)	R	Stop circuit 1 BLDC	No
AL157	Circuit 1 Inverter - Drive overload (28)	R	Stop circuit 1 BLDC	No
AL158	Circuit 1 Inverter - Error code (29)	R	Stop circuit 1 BLDC	No
AL159	Circuit 1 Inverter - Unexpected stop (99)	R	Stop circuit 1 BLDC	No
AL160	Circuit 1 BLDC - Starting failure	M	None	Parameter Cb06
AL161	Circuit 1 BLDC – Delta pressure > than allowable at startup	A	Stop circuit 1 BLDC	5min
AL165	Circuit 1 - Alarm freeze evaporation temperature	M	Stop circuit 1	Parameter A041
AL166	Circuit 1 - Compressor 1 maintenance	A	None	Parameter Ca00
AL167	Circuit 1 - Compressor 2 maintenance	A	None	Parameter Ca02
AL168	Circuit 1 - Compressor 3 maintenance	A	None	Parameter Ca04
AL169	Circuit 1 - Alarm condensing temperature probe	A	Stop circuit 1	10s
AL170	Circuit 1 - Source fan 1 maintenance	A	None	Parameter E006
AL173	Circuit 1 - High pressure alarm by pressure switch	M	Stop circuit 1	No
AL174	Circuit 1 - Low pressure alarm by pressure switch	R	Stop circuit 1	Parameter Ca19/Ca20
AL175	Circuit 1 - Overload compressor 1	M	Stop compr.1 Circ.1	No
AL176	Circuit 1 - Overload compressor 2	M	Stop compr.2 Circ.1	No
AL177	Circuit 1 - Overload compressor 3	M	Stop compr.3 Circ.1	No
AL178	Circuit 1 - Pump-Down end for maximum time	A	Stop circuit 1	Parameter B035
AL179	Circuit 1 Inverter - Unexpected restart (98)	R	Stop circuit 1 BLDC	No
AL300	Circuit 1 - Alarm Safe 101	A	Stop circuit 1 BLDC	No
AL301	Circuit 1 - Alarm Safe 102	A	Stop circuit 1 BLDC	No
AL302	Circuit 1 - Alarm Safe 103	A	Stop circuit 1 BLDC	No
AL303	Circuit 1 - Alarm Safe 104	A	Stop circuit 1 BLDC	No
AL304	Circuit 1 - Alarm Safe 105	A	Stop circuit 1 BLDC	No
AL305	Circuit 1 - Alarm Safe 106	A	Stop circuit 1 BLDC	No
AL306	Circuit 1 - Alarm Safe 107	A	Stop circuit 1 BLDC	No
AL307	Circuit 1 - Alarm Safe 108	A	Stop circuit 1 BLDC	No
AL308	Circuit 1 - Alarm Safe 109	A	Stop circuit 1 BLDC	No
AL309	Circuit 1 - Alarm Safe 110	A	Stop circuit 1 BLDC	No
AL310	Circuit 1 - Alarm Safe 111	A	Stop circuit 1 BLDC	No

AL311	Circuit 1 - Alarm Safe 112	A	Stop circuit 1 BLDC	No
AL312	Circuit 1 - Alarm Safe 113	A	Stop circuit 1 BLDC	No
AL313	Circuit 1 - Alarm Safe 114	A	Stop circuit 1 BLDC	No
AL314	Circuit 1 - Alarm Safe 115	A	Stop circuit 1 BLDC	No
AL315	Circuit 1 - Alarm Safe 116	A	Stop circuit 1 BLDC	No
AL316	Circuit 1 - Alarm Safe 201	A	Stop circuit 1 BLDC	No
AL317	Circuit 1 - Alarm Safe 202	A	Stop circuit 1 BLDC	No
AL318	Circuit 1 - Alarm Safe 203	A	Stop circuit 1 BLDC	No
AL319	Circuit 1 - Alarm Safe 204	A	Stop circuit 1 BLDC	No
AL320	Circuit 1 - Alarm Safe 205	A	Stop circuit 1 BLDC	No
AL321	Circuit 1 - Alarm Safe 206	A	Stop circuit 1 BLDC	No
AL322	Circuit 1 - Alarm Safe 207	A	Stop circuit 1 BLDC	No
AL323	Circuit 1 - Alarm Safe 208	A	Stop circuit 1 BLDC	No
AL324	Circuit 1 - Alarm Safe 209	A	Stop circuit 1 BLDC	No
AL325	Circuit 1 - Alarm Safe 210	A	Stop circuit 1 BLDC	No
AL326	Circuit 1 - Alarm Safe 211	A	Stop circuit 1 BLDC	No
AL327	Circuit 1 - Alarm Safe 212	A	Stop circuit 1 BLDC	No
AL328	Circuit 1 - Alarm Safe 213	A	Stop circuit 1 BLDC	No
AL329	Circuit 1 - Alarm Safe 214	A	Stop circuit 1 BLDC	No
AL330	Circuit 1 - Alarm Safe 215	A	Stop circuit 1 BLDC	No
AL331	Circuit 1 - Alarm Safe 216	A	Stop circuit 1 BLDC	No
AL200	Circuit 2 - Alarm discharge probe pressure	A	Stop circuit 2	10s
AL201	Circuit 2 - Alarm suction probe pressure	A	Stop circuit 2	10s
AL202	Circuit 2 - Alarm discharge probe temperature	A	Stop circuit 2	10s [2]
AL203	Circuit 2 - Alarm suction probe temperature	A	Stop circuit 2	10s
AL205	Circuit 2 Envelope - High compression ratio	A	Stop circuit 2	Parameter Cb17
AL206	Circuit 2 Envelope - High discharge pressure	M	Stop circuit 2	Parameter Cb17
AL207	Circuit 2 Envelope - High motor current	A	Stop circuit 2	Parameter Cb17
AL208	Circuit 2 Envelope - High suction pressure	A	Stop circuit 2	Parameter Cb17
AL209	Circuit 2 Envelope - Low compression ratio	A	Stop circuit 2	Parameter Cb17
AL210	Circuit 2 Envelope - Low differential pressure	A	Stop circuit 2	Parameter Cb18
AL211	Circuit 2 Envelope - Low discharge pressure	A	Stop circuit 2	Parameter Cb17
AL212	Circuit 2 Envelope - Low suction pressure	A	Stop circuit 2	Parameter Cb17
AL213	Circuit 2 Envelope - High discharge temperature	A	Stop circuit 2	Parameter Cb17
AL214	Circuit 2 EVD - Low SH	M	Stop circuit 2	Parameter B024
AL215	Circuit 2 EVD - LOP	A	Stop circuit 2	Parameter B025
AL216	Circuit 2 EVD - MOP	A	Stop circuit 2	Parameter B026
AL217	Circuit 2 EVD - High condensing temperature	A	Stop circuit 2	Parameter B029
AL218	Circuit 2 EVD - Low suction temperature	A	Stop circuit 2	Parameter B031
AL219	Circuit 2 EVD - Motor error	M	Stop circuit 2	No
AL220	Circuit 2 EVD - Emergency closing	A	Stop circuit 2	No
AL221	Circuit 2 EVD - Setting out of bound	A	Stop circuit 2	No
AL222	Circuit 2 EVD - Settings range error	A	None	No
AL223	Circuit 2 EVD - Offline	A	Stop circuit 2	No
AL224	Circuit 2 EVD - Low battery	A	None	No
AL225	Circuit 2 EVD - EEPROM	A	None	No
AL226	Circuit 2 EVD - Incomplete valve closing	A	Stop circuit 2	No
AL227	Circuit 2 EVD - Firmware not compatible	A	Stop circuit 2	No
AL228	Circuit 2 EVD - Configuration error	A	Stop circuit 2	No
AL229	Circuit 2 Inverter - Offline	A	Stop circuit 2 BLDC	30s
AL230	Circuit 2 Inverter - Drive overcurrent (01)	R	Stop circuit 2 BLDC	No
AL231	Circuit 2 Inverter - Motor overload (02)	R	Stop circuit 2 BLDC	No

AL232	Circuit 2 Inverter - DC Bus overvoltage (03)	R	Stop circuit 2 BLDC	No
AL233	Circuit 2 Inverter - DC bus undervoltage (04)	R	Stop circuit 2 BLDC	No
AL234	Circuit 2 Inverter - Drive overtemperature (05)	R	Stop circuit 2 BLDC	No
AL235	Circuit 2 Inverter - Drive undertemperature (06)	R	Stop circuit 2 BLDC	No
AL236	Circuit 2 Inverter - HW overcurrent HW (07)	R	Stop circuit 2 BLDC	No
AL237	Circuit 2 Inverter - PTC motor overtemperature (08)	R	Stop circuit 2 BLDC	No
AL238	Circuit 2 Inverter - IGBT module error (09)	R	Stop circuit 2 BLDC	No
AL239	Circuit 2 Inverter - CPU error (10)	R	Stop circuit 2 BLDC	No
AL240	Circuit 2 Inverter - Parameter default (11)	R	Stop circuit 2 BLDC	No
AL241	Circuit 2 Inverter - DC bus ripple (12)	R	Stop circuit 2 BLDC	No
AL242	Circuit 2 Inverter - Data communication fault (13)	R	Stop circuit 2 BLDC	No
AL243	Circuit 2 Inverter - Drive thermistor fault (14)	R	Stop circuit 2 BLDC	No
AL244	Circuit 2 Inverter - Autotuning fault (15)	R	Stop circuit 2 BLDC	No
AL245	Circuit 2 Inverter - Drive disabled (16)	R	Stop circuit 2 BLDC	No
AL246	Circuit 2 Inverter - Motor phase fault (17)	R	Stop circuit 2 BLDC	No
AL247	Circuit 2 Inverter - Internal fan fault (18)	R	Stop circuit 2 BLDC	No
AL248	Circuit 2 Inverter - Speed fault (19)	R	Stop circuit 2 BLDC	No
AL249	Circuit 2 Inverter - PFC module error (20)	R	Stop circuit 2 BLDC	No
AL250	Circuit 2 Inverter - PFC overvoltage (21)	R	Stop circuit 2 BLDC	No
AL251	Circuit 2 Inverter - PFC undervoltage (22)	R	Stop circuit 2 BLDC	No
AL252	Circuit 2 Inverter - STO detection error (23)	R	Stop circuit 2 BLDC	No
AL253	Circuit 2 Inverter - STO detection error (24)	R	Stop circuit 2 BLDC	No
AL254	Circuit 2 Inverter - Ground fault (25)	R	Stop circuit 2 BLDC	No
AL255	Circuit 2 Inverter - ADC conversion sync fault (26)	R	Stop circuit 2 BLDC	No
AL256	Circuit 2 Inverter - HW sync fault (27)	R	Stop circuit 2 BLDC	No
AL257	Circuit 2 Inverter - Drive overload (28)	R	Stop circuit 2 BLDC	No
AL258	Circuit 2 Inverter - Error code (29)	R	Stop circuit 2 BLDC	No
AL259	Circuit 2 Inverter - Unexpected stop (99)	R	Stop circuit 2 BLDC	No
AL260	Circuit 2 BLDC - Starting failure	M	None	Parameter Cb06
AL261	Circuit 2 BLDC - Delta pressure > than allowable at startup	A	Stop circuit 2 BLDC	5min
AL265	Circuit 2 - Alarm freeze evaporation temperature	M	Stop circuit 2	Parameter A041
AL266	Circuit 2 - Compressor 1 maintenance	A	None	Parameter Ca06
AL267	Circuit 2 - Compressor 2 maintenance	A	None	Parameter Ca08
AL268	Circuit 2 - Compressor 3 maintenance	A	None	Parameter Ca10
AL269	Circuit 2 - Alarm condensing temperature probe	A	Stop circuit 2	10s
AL270	Circuit 2 - Source fan 1 maintenance	A	None	Parameter E006
AL273	Circuit 2 - High pressure alarm by pressure switch	M	Stop circuit 2	No
AL274	Circuit 2 - Low pressure alarm by pressure switch	R	Stop circuit 2	Parameter Ca19/Ca20
AL275	Circuit 2 - Overload compressor 1	M	Stop compr.1 Circ.2	No
AL276	Circuit 2 - Overload compressor 2	M	Stop compr.2 Circ.2	No
AL277	Circuit 2 - Overload compressor 3	M	Stop compr.3 Circ.2	No
AL278	Circuit 2 - Pump-Down end for max time	A	Stop circuit 2	Parameter B035
AL279	Circuit 2 Inverter - Unexpected restart (98)	R	Stop circuit 2 BLDC	No
AL332	Circuit 2 - Alarm Safe 101	A	Stop circuit 2 BLDC	No
AL333	Circuit 2 - Alarm Safe 102	A	Stop circuit 2 BLDC	No
AL334	Circuit 2 - Alarm Safe 103	A	Stop circuit 2 BLDC	No
AL335	Circuit 2 - Alarm Safe 104	A	Stop circuit 2 BLDC	No
AL336	Circuit 2 - Alarm Safe 105	A	Stop circuit 2 BLDC	No
AL337	Circuit 2 - Alarm Safe 106	A	Stop circuit 2 BLDC	No
AL338	Circuit 2 - Alarm Safe 107	A	Stop circuit 2 BLDC	No
AL339	Circuit 2 - Alarm Safe 108	A	Stop circuit 2 BLDC	No
AL340	Circuit 2 - Alarm Safe 109	A	Stop circuit 2 BLDC	No
AL341	Circuit 2 - Alarm Safe 110	A	Stop circuit 2 BLDC	No
AL342	Circuit 2 - Alarm Safe 111	A	Stop circuit 2 BLDC	No
AL343	Circuit 2 - Alarm Safe 112	A	Stop circuit 2 BLDC	No
AL344	Circuit 2 - Alarm Safe 113	A	Stop circuit 2 BLDC	No
AL345	Circuit 2 - Alarm Safe 114	A	Stop circuit 2 BLDC	No
AL346	Circuit 2 - Alarm Safe 115	A	Stop circuit 2 BLDC	No
AL347	Circuit 2 - Alarm Safe 116	A	Stop circuit 2 BLDC	No
AL348	Circuit 2 - Alarm Safe 201	A	Stop circuit 2 BLDC	No
AL349	Circuit 2 - Alarm Safe 202	A	Stop circuit 2 BLDC	No
AL350	Circuit 2 - Alarm Safe 203	A	Stop circuit 2 BLDC	No
AL351	Circuit 2 - Alarm Safe 204	A	Stop circuit 2 BLDC	No
AL352	Circuit 2 - Alarm Safe 205	A	Stop circuit 2 BLDC	No
AL353	Circuit 2 - Alarm Safe 206	A	Stop circuit 2 BLDC	No
AL354	Circuit 2 - Alarm Safe 207	A	Stop circuit 2 BLDC	No
AL355	Circuit 2 - Alarm Safe 208	A	Stop circuit 2 BLDC	No

AL356	Circuit 2 - Alarm Safe 209	A	Stop circuit 2 BLDC	No
AL357	Circuit 2 - Alarm Safe 210	A	Stop circuit 2 BLDC	No
AL358	Circuit 2 - Alarm Safe 211	A	Stop circuit 2 BLDC	No
AL359	Circuit 2 - Alarm Safe 212	A	Stop circuit 2 BLDC	No
AL360	Circuit 2 - Alarm Safe 213	A	Stop circuit 2 BLDC	No
AL361	Circuit 2 - Alarm Safe 214	A	Stop circuit 2 BLDC	No
AL362	Circuit 2 - Alarm Safe 215	A	Stop circuit 2 BLDC	No
AL363	Circuit 2 - Alarm Safe 216	A	Stop circuit 2 BLDC	No
AL365	Circuit 1 - Overload fans	M	Stop circuit 1	No
AL366	Circuit 2 - Overload fans	M	Stop circuit 2	No

(1) In case of single evaporator/condenser pump, also the "alarm evaporator/condenser pumps " (AL016/017) is activated. In case of double evaporator/condenser pump, the latter is activated only when both "overload pump alarm" (AL008-009/AL010-011) are simultaneously active.
(2) In the case of sensor NTC-HT, the alarm probe disconnected or below the value 0.0 °C (-32F) is given 60s after switching on the compressor.

Reset:
A: automatic reset
M: manual reset
R: Automatic reset with retries

8 UCHILLER Controller (CAREL)

µChiller

8.1 Introduction

µChiller is the Carel solution for the complete management of chiller units, air/water and water/water heat pumps and motor condensing units. In addition, this solution allows the field replacement of µchiller2 and µchiller2 SE with the new product (hereinafter referred to as the Legacy model). The maximum configuration manages 2 compressors per circuit (*) 1 and up to a maximum of 2 circuits (thanks to the use of an expansion card for circuit 2). The distinctive element of µChiller is the complete control of high-efficiency units thanks to the integrated management of the electronic valve (ExV) and BLDC brushless compressors, ensuring greater compressor protection and reliability and high unit efficiency. The user terminal enables wireless connectivity with mobile devices and is integrated into panel mount models, and is purchased separately from DIN rail mount models. The CAREL "APPLICA" application, available on Google Play for the Android operating system, facilitates the configuration of the parameters and commissioning of the unit in the field.

8.1.1 Main functions

Reference	Description
Main caracterictics	-Up to two circuits and 2+2 compressors -Compressors in tandem configuration with possible BLDC compressor (*) -Chiller or heat pump Air/Water (A/W) -Chiller or heat pump Water/Water (W/W) -Cold only condensing motorcycle unit -Reversible condensing motorcycle unit -Air/air only cold unit (Legacy models only) -Reversible air/air unit (Legacy models only) -1 evaporator per unit -Air condenser with separated/shared air circuit for A/W circuit -Water condenser with single circuit for W/W units
Hardware	-Model for panel mounting: ON-OFF compressor management -DIN rail mounting model: ON-OFF compressor management -Model for DIN rail mounting, enhanced: ON-OFF compressor management -Model for DIN rail mounting, high efficiency: BLDC compressor management
User interface	LED display 7 - segments, 2 lines, optional PGDx graphic display, communication with APPLICA app (NFC and BTLE compatible) for mobile device.
Termorregulation	-START PID -Regime PID -Compensation of the setpoint on external temperature
Compressor rotation	Fixed or by time
Compressor Management	-Specific BLDC compressors (see list in KSA - µChiller section) -Generic scroll compressors.
Oil Management with BLDC	-Oil recovery function (long operation at partial load) -Oil equalization (tandem with BLDC compressor)
Circuit destabilizer	Forced compressor rotation (prolonged operation at partial load)
ExV driver	Integrated valve driver in enhanced and high efficiency models External driver management in FieldBus port (all versions)
Programming with time slot	-ON-OFF unit or 2nd selectable setpoint (1 daily time slot) -"Noise reduction" function for condensing fans (1 time slot daily)
Supply pumps	-1/2 pumps (2 pumps only with 2 circuits) -Time rotation or pump overload alarm -Cyclic activation during standby
Water condensation	1 pump common to the 2 circuits
Air condensation	-Independent ventilation for each circuit or common to the circuits

	-Modulation of fans over condensing temperature -(control of on/Off fans via CONVONOFF0 Carel module) -Optimized start-up to speed up the compressor quickly -Fan lock protection (cold weather)
Desescarche	-Simultaneous -Separated -Independent -Only with the use of fans -Management of the defrost interval as a function of the external temperature ("Fluid defrost")
Prevention	-Prevention of scroll compressor operating limits due to condensation and evaporation temperature -Anti-icing prevention of the evaporator -Total management of BLDC compressor enclosure limits
Alarms	-Automatic and manual restoration management according to the severity of the alarm (see chapter "Alarms") -Alarm logging (up to 20 events): storage of data and time of alarm and restore
Connectivity/monitoring	RS485 serial port
Modbus RTU	-Speed up to 115200 bit/s -Configurable frame in Parity (None, Even, Odd) and Stop bits (1 or 2). Fixed data bits in 8 bits.

8.1.2 Accessories

8.1.2.1 µChiller User Terminal

For DIN rail mounted models (integrated into the panel model). The user's terminal comprises the display and keyboard, consisting of 4 keys that, pressed individually or combined, allow the operations reserved for the "User" and "Assistance “profiles to be carried out (see section "Commissioning"). Connectivity, NFC or NFC + Bluetooth (BLE) depending on the model, allows interaction with mobile devices and facilitates the commissioning of the unit (previously install the CAREL application "Applica" for the Android operating system, see chapters "With initial capacity" and "User interface"). For assembly, refer to the instruction sheet with code. +0500146IE.

8.1.2.2 pGDx Touch User Terminal

The 4.3-inch pGDx graphics terminal belongs to the family of touchscreen terminals designed to make the user interface simpler and more intuitive. The electronic technology used and the 65K color display allow to manage images of high quality and advanced functionality to achieve a high aesthetic standard. In addition, the touch screen facilitates human-machine interaction, making navigation between different screens easier. Refer to the code instruction sheet. +050001895.

8.1.2.3 Valvula driver EVD Evolution/ EVD Evolution twin

The Enhanced and High Efficiency models have the driver integrated into the control. The driver can handle single-core valves (up to the Carel E3V model, with cooling capacity less than 90-100kW). In all versions the external EVD Evolution driver can be connected to operate bipolar valves (with superior cooling capacity).

8.2 Installation

8.2.1 Electrical installation

Attention: before carrying out any maintenance intervention, disconnect the control of the power supply network by positioning the general switch of the installation in "off".

8.2.1.1 Description of terminals

Panel Model

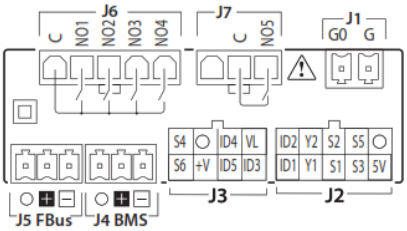

Models for DIN lane

Basic

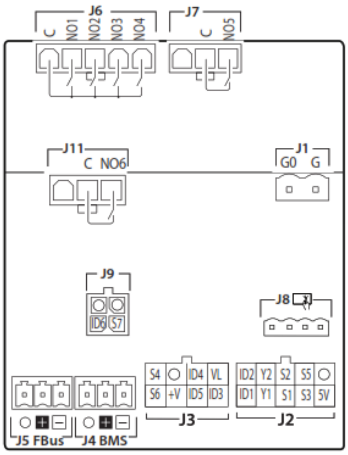

REF.	DESCRIPTION
J1	G- Food G0- Feeding: reference
J2	5V - Proportional probe power S3 - Analog input 3 S1 - Analog input 1 Y1 - Analog output 1 ID1- Digital input 1 O - GND: reference probes, digital inputs and analog outputs S5 - Analog input 5 S2 - Analog input 2 Y2 - Analog output 2 ID2 digital input 2
J3	ID3- Digital input 3 ID5- Digital input 5 +V- Active probe power supply 4...20 mA S6- Analog input 6 VL- No used ID4 - Digital input 4 O - GND: reference analog and digital inputs S4 - Digital inputs 4
J4	(-)-BMS serial port (RS485): Rx/Tx – + - BMS serial port(RS485): Rx/Tx + O - BMS serial port(RS485): GND

Enhanced/ High Efficiency

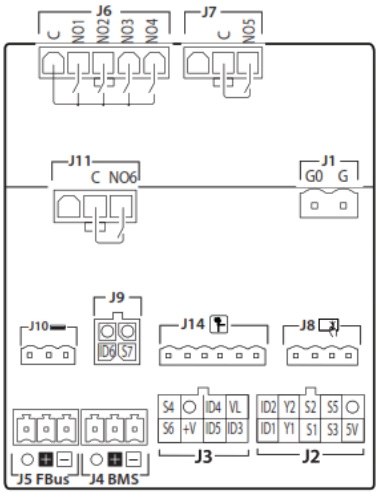

REF.	DESCRIPTION
J5	-Fieldbus serial port (RS485): Rx/Tx - + Fieldbus serial port (RS485): Rx/Tx + Or Fieldbus serial port (RS485): GND
J6	C - Common Relays 1,2,3,4 NO1- Digital output (relay) 1 NO2- Digital output (relay) 2 NO3- Digital output (relay) 3 NO4- Digital output (relay) 4
J7	C - Common relay 5 NO5- Digital output (relay) 5
J8	Unit terminal connector (AX5* or PGR04*)
J9	S7 - Analog input 7 ID6 - Digital input 6 O - Reference entries O - Reference entries
J10	G- Power supply of the Ultracap module (future use) G0 Vbat Alim. emergency per Ultracap module (future use)
J11	- Not used C - Common relay 6 NO6- Digital output (relay) 6
J14	Unipolar Carel ExV valve connector

8.2.2 Connection to user terminals

8.2.2.1 Panel model

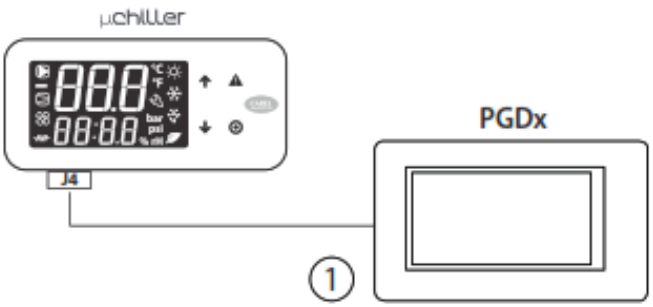

8.2.2.2 Model for DIN lane

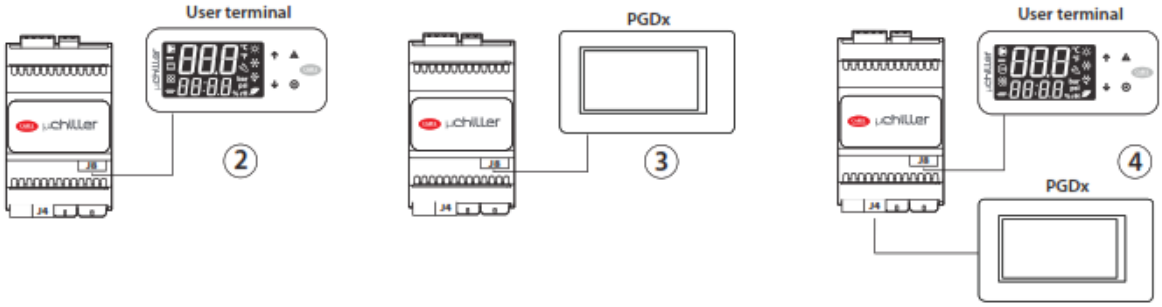

8.2.3 Electrical installation

Attention: In the execution of the wiring, "physically" separate the power part from the control part. The proximity of these two sets of wires will, in most cases, cause problems of induced alterations, or over time, breakdowns or damage to the control. The ideal condition is obtained by predisposing the place of these two circuits in two different cabinets. Sometimes it is not possible to carry out the electrical installation in this way, and it is necessary to place in different areas inside the same panel the power part and the maneuvering part. For maneuver signals, it is advisable to use shielded cables with twisted conductors. In the event that the maneuvering cables must be crossed with the power cables, the crossing must be planned with angles as close as possible to 90 degrees, completely avoiding laying maneuvering cables parallel to the power cables.

8.2.4 Connecting serial ports with two circuits

For serial connections (FBus and BMS port), it is essential to use cables suitable for the RS485 standard (twisted pair shielded cable, see features in the table below). The grounding of the screen

is made using the shortest possible connection on the metal panel at the bottom of the electrical panel.

Device	Serial port	Lmax (m)	Wire/wire capacity (pf/m)	Resistance on the first and last devices	Max number of connected devices	Data rate (bit/s)
Uchiller	FBus	10	<90	120Homs	16	19200
PC (supervisor)	BMS	500	<90	120Homs	16	115200

Note: The termination resistors of 120 Ω, 1/4 won the first and last device in the network are placed if the length of the network exceeds 100 m.

In the case of dual circuit units, it is necessary to respect the connection of the in-phase power between the two controls (G0 of the circuit control 1 and G0 of the circuit control 2 connected to the same power cable). The serial connection between the two controls (between J5 FBus of circuit 1 and J4 BMS of circuit 2) is made as shown in the figure (+ with + e - with -).

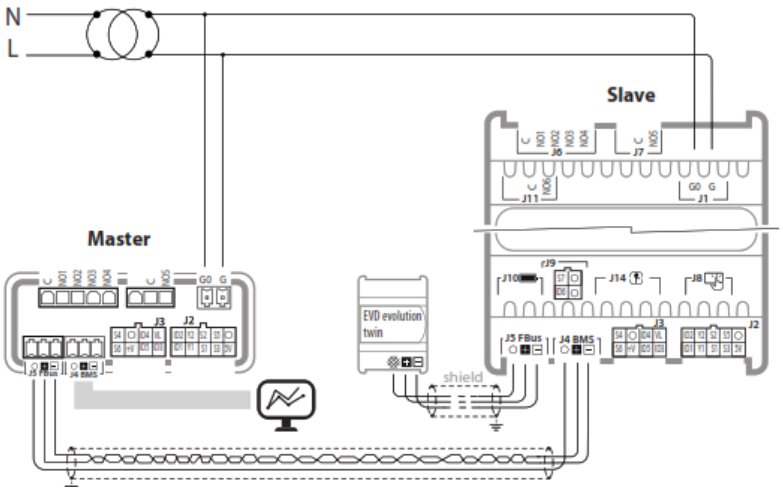

8.2.5 I/O configuration

The following is information on how to configure µChiller inputs and outputs.

Panel mounting model

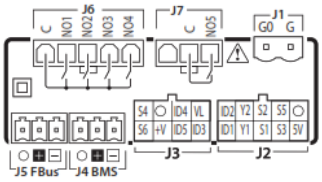

DIN rail model (Basic)

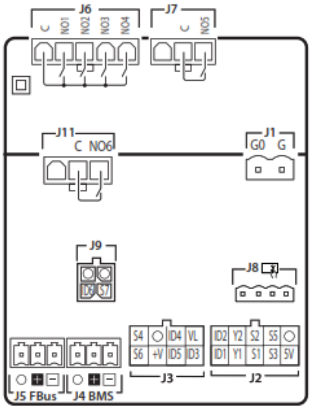

8.2.5.1 Analog inputs

The analog inputs of µChiller Legacy are divided into four groups according to the type of sensor to be connected. Below is the division into groups and the list of parameters that are used to configure the different analog inputs:

GROUP	SENSOR	CONFIGURAC PARAMETER. CIRCUIT 1	CONFIGURAC PARAMETER. CIRCUIT 2
GRP 1	S1	HC31	HC41
	S2	HC32	HC42
	S3	HC00	HC43
GRP 2	S4	HC34	HC44
	S5	HC35	HC45
GRP 3	S6	HC03	HC05
GRP 4	S7	HC04	HC47

(*) only available in DIN version

The meaning assigned to analog inputs based on the different groups for circuit 1 control is as follows:

Value	GRP 1	GRP 2	GRP 3
0	Not used		
1	Source water delivery temperature	Not used	Not used
2	External temperature	Source water delivery temperature	Temp. impulsion water source
3	Circuit temperature 1	External temperature	External temperature
4	Condensation temperature circuit 1	Discharge temperature circuit 1	Remote setpoint

5	Suction temperature circuit 1	Condensation temperature circuit. 1	Discharge temperature circuit 1
6	Evaporation temperature circuit 1	Aspiration temperature circuit. 1	Condensation temperature circuit. 1
7	System water return temperature	Evaporation temperature circuit. 1	Aspiration temperature circuit. 1
8	System water delivery temperature	Condensation pressure circ.1	Evaporation temperature circuit. 1
9		Evaporation pressure circ.1	Condensation pressure circ.1
10		System water return temperature	Evaporation pressure circ.1
11			System water return temperature

The meaning assigned to analog inputs according to the different groups for circuit 2 control is as follows:

Value	GRP 1	GRP 2	GRP 3
0	Not used		
1	Not used	Not used	Not used
2	Source water delivery temperature	Source water delivery temperature	Source water delivery temperature
3	External temperature	External temperature	External temperature
4	Discharge temperature circuit 2	Discharge temperature circuit 2	Remote setpoint
5	Condensation temperature circ.2	Condensation temperature circ.2	Discharge temperature circuit 2
6	Suction temperature circ.2	Suction temperature circ.2	Condensation temperature circ.2
7	Evaporation temperature circ.2	Evaporation temperature circ.2	Suction temperature circ.2
8	Common temperature impulsion water	Condensation pressure circ. 2	Evaporation temperature circ.2
9		Evaporation pressure circ. 2	Condensation pressure circ. 2
10		Common temperature impulsion water	Evaporation pressure circ. 2
11			Common temperature impulsion water

8.2.5.2 Digital inputs

Below is the list of parameters that are used to configure the different digital inputs:

Digital inputs	Circuit configuration parameter 1	Circuit configuration parameter 2
ID1	HC14	HC16
ID2	HC15	HC17
ID3	High pressure switch circ.1	High pressure switch circ. 2
ID4	HC06	HC09
ID5	HC07	HC10
ID6*	HC08*	HC11

The configuration parameters of digital inputs can assume the following meaning:

Value	Description circuit 1	Description circuit 2
0	Not used	Not used
1	Supply pump flow state	Supply pump flow state
2 *	Compressor thermal 1 circ.1	Compressor thermal 1 circ.1
3 *	Compressor thermal 2 circ.1	Compressor thermal 2 circ.1
4	On/off remote	On/off remote
5	Refrigeration/Calefaction	Refrigeration/Calefaction
6	2° Setpoint	2° Setpoint
7	Remote alarm	Remote alarm
8	Thermal supply pump 1	Thermal supply pump 1
9	Low-pressure pressure switch circ. 1	Low-pressure pressure switch circ. 1
10	Thermal supply pump 2	Thermal supply pump 2
11	Compressor Demand. 1 circ.1	Compressor Demand. 1 circ.1
12	Compressor Demand. 2 circ.1	Compressor Demand. 2 circ.1

8.2.5.3 Analog outputs

The following is a list of parameters used to configure analog outputs:

analog output	Circuit 1 configuration parameter	Circuit 2 configuration parameter
Y1	HC71	HC81
Y2	HC72	HC82

The configuration parameters of analog outputs can assume the following meaning:

Value	circuit 1 description	circuit 2 description
0	Not used	Not used
1	Fan/pump source on-off circ.1	Fan/pump source on-off circ.1
2	Modulating source fan circ.1	Modulating source fan circ.1
3	Free cooling	Free cooling

8.2.5.4 Digital outputs

Below is the list of parameters that are used to configure the different digital outputs:

Digital output	Circuit 1 configuration parameters	Circuit 2 configuration parameters
NO1	HC51	HC61
NO2	HC52	HC62
NO3	HC53	HC63
NO4	HC54	HC64
NO5	HC55	HC65
NO6*	HC56	HC66

(*) only available in DIN version

The configuration parameters of digital outputs can assume the following meaning:

Value	Description circuit 1	Description circuit 2
0	Not used	Not used
1	Compressor 1 circuit 1	Compressor 2 circuit 2
2	Compressor 2 circuit 1	Compressor 2 circuit 2
3	subminister 1 resistance	subminister 2 resistance
4	Supply pump 1 / supply fan	Supply pump 2 / supply fan
5	pump/Fan Source	pump/Fan Source
6	Anti-icing resistance evaporator 1	Anti-icing resistance evaporator 2
7	4-way valve circuit 1	4-way valve circuit 2
8	Oil equalization valve circuit 1	Oil equalization valve circuit 2
9	Free cooling valve	
10	General alarm	
11	Supply pump 2	
12	Supply resistance 2	

8.3 USER INTERFACE

8.3.1 Introduction

µChiller uses the user terminal to display alarms, key variables and to configure the unit setpoint (User level) and manual commands (Assist level). The terminal has a seven-segment LED display in two lines: the top line is 3 digits + sign with decimal point; the lower 4-digit signed (can also display time format -hh:mm and date - MM:DD). It also has a buzzer, 14 operating icons and 4 keys for navigation and parameter settings. The terminal has NFC (Near Field Communication) and Bluetooth (depending on the model) connectivity to interact with mobile devices (in which the Carel app "Applica" available on Google Play for Android operating systems has been installed).

The information and parameters that can be accessed from the terminal and from the Applica app depend on the access level and configuration parameters of the unit.

8.3.2 User Terminal

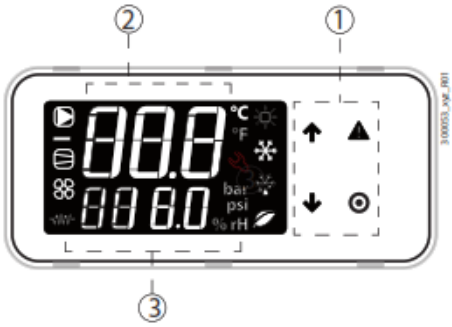

legend

1 – keyboard

2 – Main field

3 – device status icons and operating mode

Note: The user terminal only allows access to some User and Support level parameters: to access all Support and Manufacturer parameters it is necessary to use the Carel Applica app or the configuration and commissioning tool.

8.3.2.1 Keyboard

Key	Description	Function
	Up	• In navigation: access to the preceding parameter • In programming: increase in value
	Down	• In navigation: access to the following parameter • In programming: value reduction **Main menu:** • Short pressure: display of the main display of the unit • Long pressure (3 s): access to User level parameters (setpoint, on-off unit...)
	Alarm	• Short pressure: display of active alarms and muting of the buzzer. • Long pressure (3 s): reset alarms.
	PRG.	• In navigation: access to the programming of the parameters. **During programming:** • Short pressure: confirmation of value • Prolonged pressure (3s): return to main menu

8.3.2.2 Icons

The icons indicate the operational status of the devices and the mode of operation, as indicated in the following table.

Icon	Funtion	ON	Flashing

	System pump	Active	In manual operation
	Status Source Devices (pump/fan)	Active	In manual operation
	Compressor Status	Active	In manual operation (whit ExV)
	Anti-icing resistance	Active	-
	Operating mode	Calefaction	-
		Refrigeration	High water temperature
		Desecrate	Drip after defrost
		Free cooling	-
	Assistance	Claim for exceeding the threshold	Serious alarm, request for intervention of qualified personnel

8.3.3 Standard display

When started, the user's terminal displays for a few moments the text "NFC", which indicates the presence in the user's terminal of the NFC interface for communication with mobile devices, and then the standard display. The standard display display shows:

• in the upper row: the water delivery temperature;

• In the bottom row, with the unit on, the return temperature of the water. With the unit turned off, the "OFF" state.

Note: During "Bluetooth" communication, the text "bLE" flashes on the display.

8.3.3.1 Main screen

From the main menu, press DOWN to access information about the status of the devices and about the temperature, overheating, etc. values of the two circuits:

• "OFF" unit and cause of shutdown:

– "diSP" by keyboard;

– "dI" by remote contact (via digital input);

– "Schd" by time slot (planner);

– “bMS” por BMS;

– "ChnG" by change of operating mode (heating/cooling);

– "AlrM" by alarm.

• "CMP" compressors;

• "AFC1" water temperature of supply source circuit 1;

• "AFC2" water temperature of supply source circuit 2;

• "EuP1" evaporation temperature circuit 1;

• "SSH1" overheating circuit 1;

• "Cnd1" condensing temperature circuit 1;

• "dSt1" discharge temperature of the BLDC compressor circuit 1;

• "EuP2" evaporation temperature circuit 2;

• "SSH2" overheating circuit 2;

• "Cnd2" condensing temperature circuit 2;

• "dSt2" discharge temperature of the BLDC compressor circuit 2;

and if the access level is "Support":

• "Hd00" supervisory direction (BMS);

• "Hd01" BMS transmission speed;

• "Hd02" BMS communication parameters;

• "ESC" to exit the main screen.

Example of an interface:

Go to standard display display

Press DOWN: CMP indicates that compressor 1 is on (or) and compressor 2 is off (_).

Press DOWN: EuP1 indicates the evaporation temperature of circuit 1 (3.8°C).

Press DOWN: Cnd1 indicates the condensing temperature of circuit 1 (40.8°C).

Press DOWN for 3 s to access the shortcut functions:

8.3.3.2 Shortcut functions

Only basic configuration parameters, such as direct commands and active alarms without a password, or those dedicated to the configuration of the unit and its optimization, are accessed via the user's terminal.

Press DOWN for 3 s to access direct access function:

• Set-in point;

• On and off the unit;

• change of operating mode (cooling/heating, only in reversible units);

• Selection of units of measurement.

In programming mode, the bottom line indicates the parameter code and the top line the value.

Procedure

Press:

• DOWN for 3 s to access parameters (at user level, without password);

• UP and DOWN to navigate and configure parameters;

• PRG to change the parameter value and save medications;

• PRG (3s) or ESC to return to standard display.

1. Go to standard display.

1 Press DOWN for 3 s: Current setpoint (SEtA) appears - read-only

2 Press DOWN: The cooling setpoint (SEtC) appears)

3 Press PRG: the value flashes, press UP/DOWN to modify the value; PRG to confirm.

4 Press DOWN: the heating setpoint (SEtH) appears - only for heat pump units.

5 Press DOWN: The unit on/off command (UnSt) appears.

6 Press DOWN: the command for changing cooling mode (C) / heating (H) (ModE) appears - only for heat pump units.

7 Press DOWN: Manual defrost (dFr) command appears - at the Assist level only and for reversible A/W units.

8 Press DOWN: The command to cancel alarm registration (ClrH) appears – Support level only.

9 Press DOWN: The selection of units of measurement (UoM) appears.

10 Once the modifications are finished, to exit you can operate in two ways: at the category level select ESC and press PRG; – press PRG for 3 s

8.3.3.3 Programming mode

Go to the standard display and press PRG to enter the programming mode.

Procedure

Pulsate:

• PRG to access the parameters with password;

• UP and DOWN to navigate and configure parameters;

• PRG to change the parameter value and save modifications;

• PRG (3s) or ESC to return to standard display.

Example:

1. Go to standard display.

2 Press PRG: The password prompt (PSd) appears.

3 Press PRG: The first digit of the password flashes. Set the value, press PRG. Now the second one flashes. Repeat the process for each digit to complete the requested password.

4 Press PRG: If password correct, the first category of parameters appears: PLt (=installation).

5 Press PRG: the first parameter appears: U002 (Manual pump command 1).

6 Press PRG: The value flashes. Press UP/DOWN to modify the value; PRG to confirm.

7 Press UP/DOWN to display the rest of the parameters.

8 Press PRG for 3 sec or, alternatively, at the parameter level select ESC and
9 press PRG to return to the parameter categories.

8.4 FUNCTIONS

µChiller has regulation on the water inlet or outlet temperature of the unit. Return water temperature probes (from supply) and impulsion (to supply) can be installed in all channels. See the Installation chapter.

8.4.1 PID Regulation

Two types of PID regulation are available:

PID start-up regulation;

• PID regulation of operating regime.

For each PID regulation, the following parameters can be configured:

• Regulation probe (return or impulsion);

• Proportional gain (Kp);

• Integral time (Ti, disabled action with time to 0);

• Derived time (Td, action disabled with time to 0).

The regulation setpoint and the operating mode (heating/cooling) are the same for both regulations:

• Start-up regulation must prevent excess power demand. Since the status of the supplies (= load) is not known when starting, but only the temperature value, it is necessary to gradually increase the power supplied, pending the reaction of the system. It can be regulated on the value of the inlet water temperature, using a reduced gain and a sufficiently large integral time, greater than the system time constant (120-180 s, considering a system time constant of at least 60 s, corresponding to a minimum water content equivalent to 2.5 L/kW).

• The regulation at speed must be fast, to control possible load variations and keep the temperature of the outlet water as close as possible to the setpoint. In this case, the time constant is given by the reaction of the compressor-evaporator system and is of the order of a few tens of seconds (slower with tubular evaporators, faster with plate evaporators). The following table shows the recommended values (to be calibrated, if necessary, during the commissioning of the system), according to the type of evaporator used.

		Evaporator	
Cod.	**Regulation**	**Tubular**	**Plates**
U036	Start-up regulation probe - 0=Return 1=Drive	Return	Return
U039	Boot PID: Kp	6,0	6,0
U040	Boot PID: Ti - 0: Comprehensive Action Disabled	180 s	180 s
U041	Boot PID: Td - 0: derived action disabled	0 s	0 s
U038	Regime regulation probe - 0=Return 1=Drive	Impulsion	Impulsion
U042	Regime PID: Kp	10,0	10,0

U043	Regime PID: Ti - 0: comprehensive action disabled	120 s	120 s
U044	Regime PID: Td - 0: disabled derivative action	3 s	3 s

The operation of the regulation is as follows:

1. With the unit turned off, the two PID regulations are disabled.

2. When the unit is turned on, after the compressor activation delay after the supply pump, the PID regulation at start-up is enabled and generates a percentage demand, processed for the activation of the compressors.

3. If this demand is sufficient, a compressor is turned on.

4. Once the compressor is turned on, after a configurable delay, the change to the PID regulation in regime occurs.

5. When regulation requires compressors to be turned off, they can be turned off.

6. After turning off the last compressor, the restart occurs with PID starter regulation.

If the delay between the boot/speed PID regulations is set to 0, the active regulator will always be the Speed PID.

8.4.2 Setpoint compensation

µChiller allows the setpoint to be compensated according to the external temperature. **Note**: the function can only be enabled if the external temperature probe is present. Compensation (positive or negative) is specified by:

1. compensation start threshold (in cooling/heating);

2. end-of-compensation threshold (in cooling/heating);

3. Maximum compensation value (in cooling/heating).

User	Cod.	Description	Def.	Min.	Max.	U.O.M.
S	U010	Enabling setpoint compensation 0/1=no/yes	0	0	1	-
U	SEtC	Refrigeration setpoint	7,0	U006	U007	°C/°F
S	U011	Cooling compensation: start	25,0	-99,9	999,9	°C
S	U012	Refrigeration compensation: end	35,0	-99,9	999,9	°C
S	U013	Compensation in cooling: maximum value	5,0	-99,9	999,9	K
U	SEtH	Heating setpoint	40,0	U008	U009	°C/°F
S	U014	Heating compensation: home	5,0	-99,9	999,9	°C
S	U015	Compensation in heating: end	-10	-99,9	999,9	°C

S	U016	Compensation in heating: maximum value	5,0	-99,9	999,9	K

summer conventation:

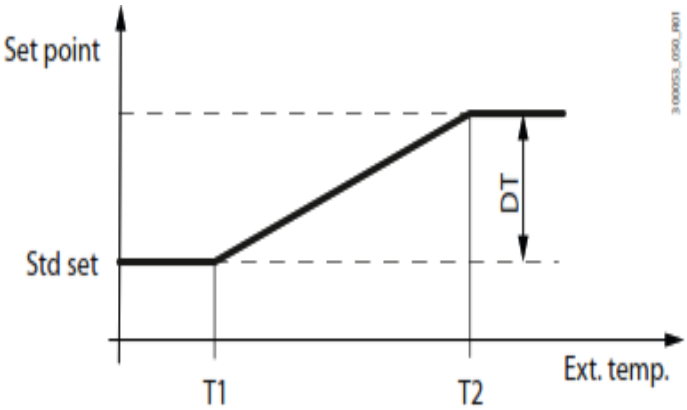

Leyend

Ext. Temp. – extra temperature

Std set – regulation setpoint

T1 – external temperature of compensation starts in refrigeration

T2 – external temperature of end of compensation re cooling

DT – maximum compensation value in refrigeration

Winter compensation:

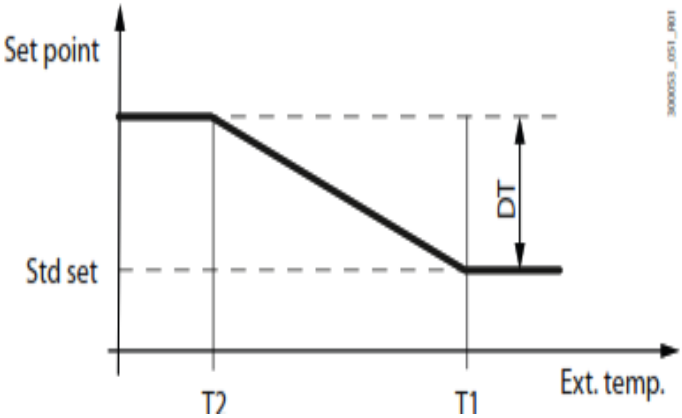

Leyend

Ext. Temp. – extra temperature

Std set – regulation setpoint

T1 – external temperature of compensation starts in refrigeration

T2 – external temperature of end of compensation re cooling

DT – maximum compensation value in refrigeration

8.4.3 BMS lawsuit

The regulation can be managed by BMS, avoiding the regulation of the internal temperature and directly controlling the power demand by assigning a percentage value (0-100.0%) to the specific Modbus series variable (BMS_PwrReq, HR 331). Enablement is done through another serial variable (BMS_PwrReq, CS 22).

Note: If the supervisor is disconnected, the unit continues to regulate autonomously, regardless of the demand coming from the BMS.

8.4.4 High temperature alarm at evaporator outlet

µChiller triggers an alarm when the water temperature at the evaporator outlet exceeds the threshold set by the user (by compensating relative to the regulation setpoint). When the output temperature exceeds the threshold, an hour counter is started and, after a delay (configurable), the alarm is triggered. There is a delay in the onset that inhibits the alarm in the initial transition period of ignition.

Notes:

• This alarm only exists on Chiller units.

• The high temperature alarm can be used to activate a backup unit in case of critical applications.

User	Code.	Description	Def.	Min.	Max.	U.O.M.
U	SetA	Current setpoint	-	-999,9	999,9	°C
S	U031	High water temperature alarm: compensation	10,0	0,0	99,9	K
S	U032	High water temperature alarm: start-up delay	15	0	99	min
S	U033	High water temperature alarm: delay in operating regime	180	0	999	s

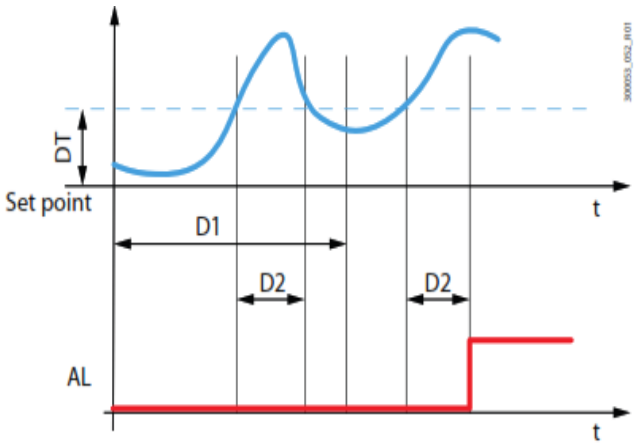

Leyend

Set point - Current setpoint

DT - Compensation

D1 - Boot delay

D2 - Operating delay

AL - Alarm

8.4.5 Supply pumps

µChiller can handle up two pumps on the supply side (depending on the hardware used and the required security). A delay can be set between pump ignition and compressor ignition (thermoregulation enablement). Likewise, a delay can be established between the shutdown of the last compressor and the shutdown of the pump. If, at the time of unit shutdown, the compressors

are switched off since at least the time of "supply pump shutdown delay after compressor", the pump is switched off immediately.

User	Code.	Description	Def.	Min	Max	U.O.M.
S	U047	Compressor activation delay after the supply pump	30	0	999	s
S	U048	Shutdown delay of the supply pump after the compressor	180	0	999	s

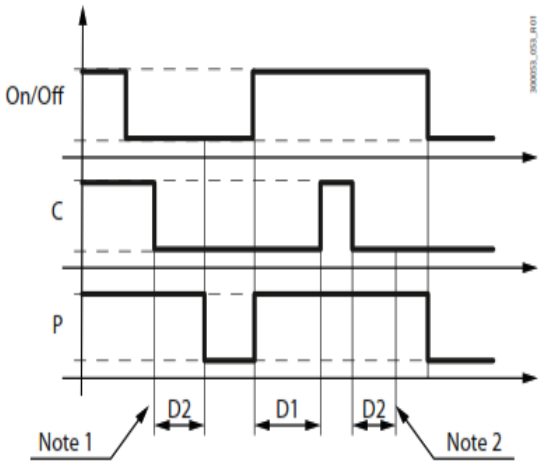

Leyend

Unit - On-Off unit (local or remote control)

C – Compressor

P - Supply pump

D1 - Compressor activation delay after the supply pump

D2 - Shutdown delay of the supply pump after the compressor

Note 1 - Regulation is not active: compressors are switched off considering their own safety periods

Note 2 - In this case, the pump can be turned off immediatel

The diagram representing operation in operation with a single pump is shown below:

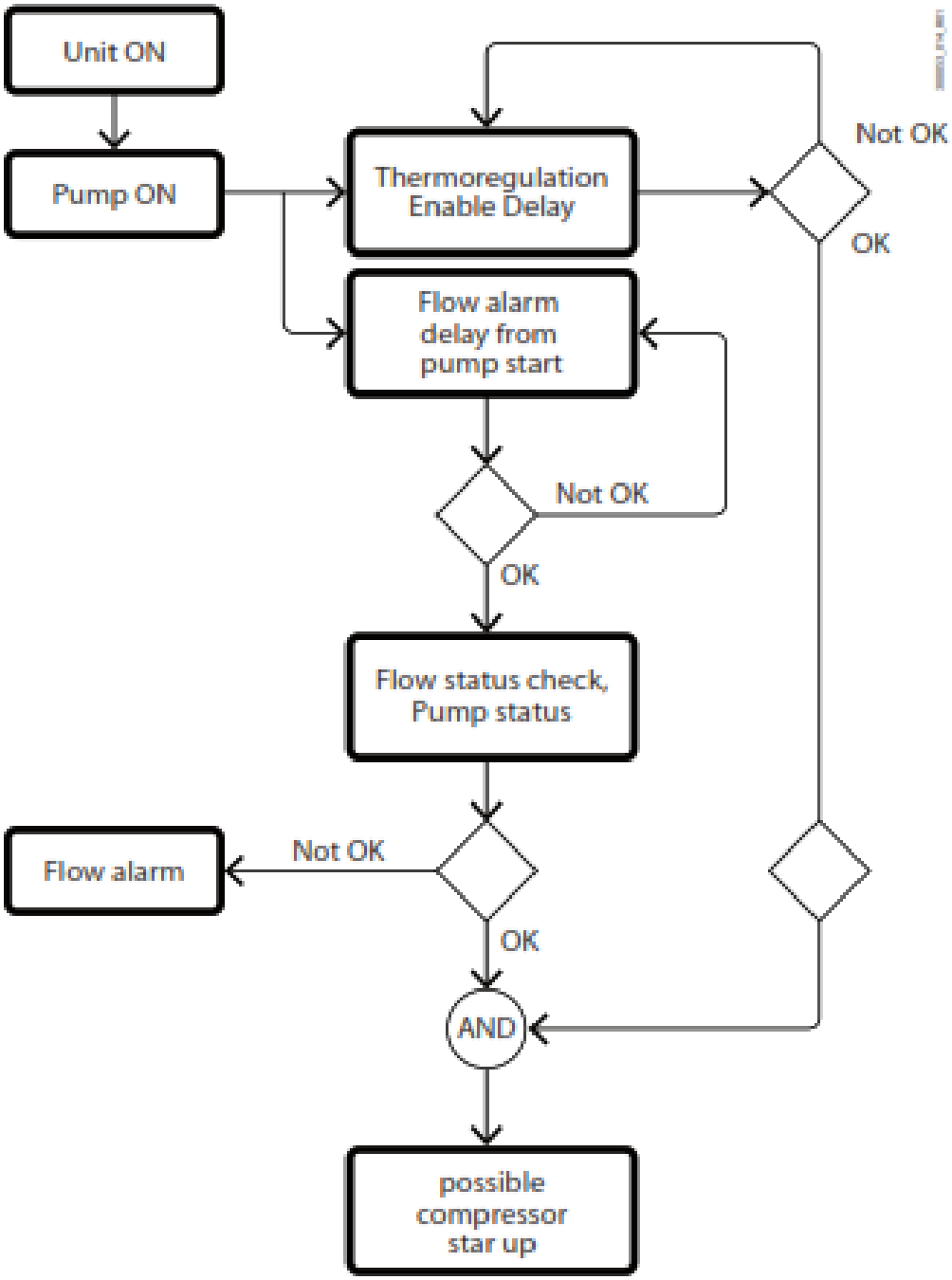

Thermoregulation is only enabled after the pump start-up alarm delay, to prevent compressors from switching on in the absence of water flow. Depending on the configuration, up to two supply pumps can be enabled. µChiller includes the following features:

• With two pumps, automatic rotation to ensure the circulation of the fluid and the equalization of the operating hours. Rotation occurs:

– at the end of a period with security in hours;

– by the intervention of the overload alarm of the active pump.

• pump overload alarm management (if available, depending on control and security). Signaling the anomaly and immediate closure of the pump.

• Management of the flow switch that controls the circulation of the fluid in the system.

• Anti-icing with unit off: the pump is turned on to activate the circulation of the fluid (with unit on, the function is disabled).

• Anti-lock pump: The pump stopped for more than a week is operated for 3 s.

8.4.6 Anti-icing control

Anti-icing control can be performed via the evaporation pressure probe, which directly monitors evaporator conditions, or via the water temperature probe. In the latter case, the water delivery temperature or the source water temperature is used in water/water units in heating mode.

User	Cod.	Description	Def.	Min.	Max.	U.O.M
S	U082	Anti-icing control type 0=Temperature evaporation 1= Water temperature	0	0	1	-

8.5 PARAMETER TABLE

Notes:

• Levels: U=User; S=Assistance; M=Manufacturer; Display: the **x** indicates that the parameter is accessed from the user's terminal.

- L/E=read/write parameters; E=solo reading parameters.

8.5.1 System

User	Display	CODE.	Description	Def.	Min.	Max.	U.O.M.	R/W	Modbus
S		U000	User pump 1: maintenance hour threshold (x100)	99	0	99	h	R/W	HR002
S		U001	User pump 1: reset hour counter	0	0	1		R/W	CS000
S	X	U002	User pump 1: operating mode 0=AUTO 1=OFF 2=ON	0	0	2		R/W	HR003
S		U003	User pump 2: maintenance hour threshold (x100)	99	0	99	h	R/W	HR004

S		U004	User pump 2: reset hour counter	0	0	1		R/W	CS001
S	X	U005	User pump 2: operating mode 0=AUTO 1=OFF 2=ON	0	0	2		R/W	HR005
S		U008	Heating set point: minimum limit	30,0	0,0	999,9	°C/°F	R/W	HR01 (2R)
S		U009	Heating set point: maximum limit	45,0	0,0	999,9	°C/°F	R/W	HR011 (2R)
S		U010	Enable set point compensation - 0/1=no/yes	0	0	1	-	R/W	CS002
S		U011	Cooling compensation: start	25,0	-99,9	999,9	°C/°F	R/W	HR015 (2R)
S		U012	Cooling compensation: end	35,0	-99,9	999,9	°C/°F	R/W	HR017 (2R)
S		U013	Cooling compensation: maximum value	5,0	-99,9	999,9	K/R	R/W	HR019 (2R)
S		U014	Heating compensation: start	5,0	-99,9	999,9	°C/°F	R/W	HR021 (2R)
S		U015	Heating compensation: end	-10	-99,9	999,9	°C/°F	R/W	HR023 (2R)
S		U016	Heating compensation: maximum value	5,0	-99,9	999,9	K/R	R/W	HR025 (2R)
S		U017	Enable time band - 0/1=No/Yes	0	0	1	-	R/W	CS003
S		U018	Time band: start hours	17	0	23	h	R/W	HR027
S		U019	Time band: start minutes	30	0	59	min	R/W	HR028
S		U020	Time band: end hours	7	0	23	h	R/W	HR029
S		U022	Type of changeover in time band 0=Off 1=2nd set point	0	0	1	-	R/W	CS004
U	X	U023	2nd cooling set point	10,0	U006	U007	°C/°F	R/W	HR031(2R)
U	X	U024	2nd heating set point	35,0	U008	U009	°C/°F	R/W	HR033(2R)
S		U025	Remote set point: analogue input 0=0-5V 1=0-10V 2=4-20 mV	0	0	0	-	R/W	HR035
S		U026	Remote set point: min value	5,0	-99,9	999,9	°C/°F	R/W	HR037(2R)
S		U027	Remote set point: max value	35,0	-99,9	99,9	°C/°F	R/W	HR039(2R)

S		U028	Remote set point: off set	0,0	-99,9	99,9	K/R	R/W	HR043(2R)
S		U034	Operating mode changeover 0=Keypad 1=Digital input	0	0	1	-	R/W	CS005
S		U035	Cooling/heating changeover: delay	15	0	999	min	R/W	HR053
S		U037	PID control delay at start-up/operation	180	0	999	s	R/W	HR054
S		U045	User pump flow alarm: delay at start-up	10	0	999	s	R/W	HR063
S		U047	Compressor activation delay after user pump	30	0	999	s	R/W	HR065
S		U048	User pump shutdown delay after compressor	180	0	999	s	R/W	HR066
S		U049	User pump rotation time	12	0	999	h	R/W	HR067
S		U050	User side frost protection: alarm threshold	-0,8	-99,9	999,9	°C/°F	R/W	HR068 (2R)
S		U052	User side frost protection: diff erential	30	0	999	s	R/W	HR072
S		U053	User-side frost protection: delay time at 1K	4,0	-99,9	999,9	°C/°F	R/W	HR073 (2R)
S		U054	Unit OFF: frost protection set point	2,0	0,0	99,9	K/R	R/W	HR075 (2R)
S		U055	Unit OFF: frost protection diff erential	0,0	-99,9	99,9	K/R	R/W	HR079 (2R)
S		U056	User side delivery temp. probe: off set	0,0	-99,9	99,9	K/R	R/W	HR083 (2R)
S		U057	Remote alarm: input logic - 0/1=NC/NO	0	0	1	-	R/W	CS008
S		U058	Cooling/heating input: logic - 0/1=NO/NC	1	0	1	-	R/W	CS009
S	X	U059	Remote ON/OFF: input logic - 0/1=NO/NC	1	0	1	-	R/W	CS010
S		U062	2nd set point: input logic - 0/1=NO/NC	1	0	1	-	R/W	CS013
M		U063	User pump: output logic - 0/1=NO/NC	0	0	1	-	R/W	CS014
S		U064	Global alarm relay: output logic - 0/1=NO/NC	0	0	1	-	R/W	CS015
S		U065	Free cooling valve: output logic - 0/1=NO/NC	0	0	1	-	R/W	CS016
M		U066	Frost protection heater: output logic - 0/1=NO/NC	0	0	1	-	R/W	CS017

S		U067	Alarm relay configuration - 0/1=Control alarms/All	0	0	1	-	R/W	CS018
S		U068	Free cooling: enable - 0/1=no/yes	0	0	1	-	R/W	CS019
S		U069	Free cooling: activation diff erential	3,0	0,0	99,9	K/R	R/W	HR085 (2R)
S		U070	Free cooling: hysteresis	1,5	0,0	99,9	K/R	R/W	HR087 (2R)
S		U071	Design free cooling delta T	8,0	0,0	99,9	K/R	R/W	HR089 (2R)
S		U072	Water free cooling: valve closing threshold	5,0	-999,9	999,9	°C/°F	R/W	HR091 (2R)
S		U073	Water free cooling: valve closing diff erential	3,0	0,0	99,9	K/R	R/W	HR093 (2R)
M		U074	Free cooling type 0=Air 1=Remote coil 2=Water	0	0	2	-	R/W	HR095
S		U075	Frost protection type 0=Heater 1=Pump 2=Heater/Pump	2	0	2	-	R/W	HR096
M		U076	Number of user pumps	1	1	2	-	R/W	HR097
S		U078	Unit pump in standby: enable On-Off cycles 0/1=No/Yes	0	0	1	-	R/W	CS080
S		U079	Unit pump in standby: On time	3	1	15	min	R/W	HR709
S		U080	Unit pump in standby: Off time	15	3	99	min	R/W	HR710
S		U081	Pressure alarm reset configuration	7	0	7	-	R/W	HR239
M		U082	Frost protection type 0 = Evaporation temperature 1 = Water delivery temperature	0	0	1		R/W	CS093
M		U083	Type of automatic changeover 0: disabled 1: on outside temperature 2: on air return temp. (for legacy AA units only)	0	0	3		R/W	HR6

			3: on delivery water temp. (AW and WW units only)						
M		U084	Automatic changeover threshold (type 1 only U083 =1)	23	-99.9	99.9	°C/°F	R/W	HR765
		U085	Automatic changeover dead band	2	0	99.9	K/R	R/W	HR772
		U086	Automatic changeover set point lower limit	0	-99.9	999.9	°C/°F	R/W	HR774
		U087	Automatic changeover set point upper limit	80	-99.9	999.9	°C/°F	R/W	HR776
		U088	Frost protection heater position 0 = user 1 = source (WW units only) 2 = user and source (WW units only)	0	0	2		R/W	HR769

8.5.2 Compressor

User	Display	Code.	Description	Def.	Min	Max	U.O.M.	R/W	Modbus
S		C000	Comp. 1 circuit 1: maintenance hour threshold(x100)	99	0	999	h	R/W	HR153
S		C001	Comp. 1 circuit 1: reset hour counter	0	0	1	-	R/W	CS023
S	X	C002	Comp. 1 circuit 1: operating mode -0=AUTO 1=OFF 2=ON	0	0	2	-	R/W	HR154
S		C003	Comp. 2 circuit 1: maintenance hour threshold(x100)	99	0	999	h	R/W	HR155
S		C004	Comp. 2 circuit 1: reset hour counter	0	0	1	-	R/W	CS024
S	X	C005	Comp. 1 circuit 2: operating mode 0=AUTO 1=OFF 2=ON	0	0	2	-	R/W	HR156
S		C006	Comp. 1 circuit 2: maintenance hour threshold(x100)	99	0	999	h	R/W	HR157

S		C007	Comp. 2 circuit 1: reset hour counter	0	0	1	-	R/W	CS025
S	X	C008	Comp. 2 circuit 1: operating mode 0=AUTO 1=OFF 2=ON	0	0	2	-	R/W	HR158
S		C009	Comp. 2 circuit 2: maintenance hour threshold(x100)	99	0	999	h	R/W	HR159
S		C010	Comp. 2 circuit 2: reset hour counter	0	0	1	-	R/W	CS026
S	X	C011	Comp. 2 circuit 2: operating mode 0=AUTO 1=OFF 2=ON	0	0	2	-	R/W	HR160
M		C017	Max high-pressure threshold (HP)	65,0	0,0	999,9	°C/°F	R/W	HR324 (2R)
M		C020	Maximum circuit destabilisation time	240	5	999	min	R/W	HR168
M		C021	Circuit capacity distribution 0 = balanced 1 = grouped	0	0	1	-	R/W	HR169
S		C022	Circuit 1: discharge temp. off set	0,0	-99,9	99,9	K/R	R/W	HR170 (2R)
S		C023	Circuit 1: suction temp. off set	0,0	-99,9	99,9	K/R	R/W	HR172 (2R)
S		C024	Circuit 2: discharge temp. off set	0,0	-99,9	99,9	K/R	R/W	HR174 (2R)
S		C025	Circuit 2: suction temp. off set	0,0	-99,9	99,9	K/R	R/W	HR176 (2R)
S		C026	Circuit 1: condensation pressure off set	0,0	-99,9	99,9	bar/psi	R/W	HR178 (2R)
S		C027	Circuit 1: evaporation pressure off set	0,0	-99,9	99,9	bar/psi	R/W	HR180 (2R)
S		C028	Circuit 1: condensing temp. off set	0,0	-99,9	99,9	K/R	R/W	HR182 (2R)
S		C029	Circuit 1: evaporation temp. off set	0,0	-99,9	99,9	K/R	R/W	HR184 (2R)

S		C030	Circuit 2: condensation pressure off set	0,0	-99,9	99,9	bar/psi	R/W	HR186 (2R)
S		C031	Circuit 2: evaporation pressure off set	0,0	-99,9	99,9	bar/psi	R/W	HR188 (2R)
S		C032	Circuit 2: condensing temp. off set	0,0	-99,9	99,9	K/R	R/W	HR190 (2R)
S		C033	Circuit 2: evaporation temp. off set	0,0	-99,9	99,9	K/R	R/W	HR192 (2R)
M		C034	HP pressure switch: input logic - 0/1=NC/NO	0	0	1	-	R/W	CS027
M		C035	Compressor overload protector: input logic 0/1=NC/NO	0	0	1	-	R/W	CS028
M		C036	Compressor: output logic - 0/1=NO/NC	0	0	1	-	R/W	CS029
M		C038	Evaporation pressure probe: min value	0,0	-1,0	99,9	bar/psi	R/W	HR195 (2R)
M		C039	Evaporation pressure probe: max value	17,3	0,0	99,9	bar/psi	R/W	HR197 (2R)
M		C041	Condensation pressure probe: min value	0,0	-1,0	99,9	bar/psi	R/W	HR200 (2R)
M		C042	Condensation pressure probe: max value	45,0	0,0	99,9	bar/psi	R/W	HR202 (2R)
M		C043	Discharge temperature Probe type (0=NTC, 1=NTC-HT)	1	0	1	-	R/W	204
M		C044	Enable destabilisation - 0/1=No/Yes	1	0	1	-	R/W	CS030
S		C045	Refrigerant 3=R407C 4=R410a 6=R290	4	0	99	-	R/W	IR038

			10=R744 22=R32						
M		C050	LP pressure switch: alarm delay in steady operation	15	0	999	-	R/W	HR269
M		C051	HP pressure switch: input logic 0=NC 1=NO	0	0	1	-	R/W	CS76

8.5.3 Source

User	Display	Code.	Description	Def.	Min	Max	U.O.M.	R/W	Modbus
S		S000	Source pump 1: threshold maintenance hours (x100)	99	0	999	h	R/W	HR209
S		S001	Source pump 1: Reset the hour counter	0	0	1	-	R/W	CS031
S	X	S002	Source pump 1: operating mode 0=CAR 1=OFF 2=ON	0	0	2	-	R/W	HR210
S		S008	Source fan 1 circuit 1: threshold of maintenance hours (X100)	99	0	999	h	R/W	HR214
S		S009	Fan source 1 circuit 1: reset hour counter	0	0	1	-	R/W	CS033
S	X	S010	ON/OFF fan source 1 circuit 1: operation 0=CAR 1=OFF 2=ON	0	0	2	-	R/W	HR215
S	X	S011	Modulating fan source circuit 1: operating mode 0=CAR 1=0% 2=1%, ... 101=100%	0	0	101	-	R/W	HR216
S		S012	Source fan 1 circuit 2: threshold of maintenance hours (X100)	99	0	999	h	R/W	HR217

S		S013	Fan source 1 circuit 2: reset hour counter	0	0	1	-	R/W	CS034
S	X	S014	ON/OFF fan source circuit 2: operation 0=AUTO 1=OFF 2=ON	0	0	2	-	R/W	HR218
S	X	S015	Modulating fan source circuit 2: operating mode 0=CAR 1=0% 2=1%, ... 101=100%	0	0	101	-	R/W	HR219
S		S016	Fan source: cold weather temperature threshold	-0,5	-999,9	999,9	°C/°F	R/W	HR220 (2R)
S		S017	Fan source: minimum speed cold weather	10,0	0,0	100,0	%	R/W	HR222 (2R)
S		S018	Fan source: cold weather boot speed	50,0	0,0	100,0	%	R/W	HR224 (2R)
S		S019	Fan source: duration cold weather boot speed	5	0	300	s	R/W	HR226
S	X	S020	Enabling noise reduction 0/1=No/Yes	0	0	1	-	R/W	CS035
S		S021	Noise reduction time slot: start time	22	0	23	h	R/W	HR167
S		S022	Noise reduction time slot: start minutes	30	0	59	min	R/W	HR212
S		S023	Noise reduction time slot: end time	8	0	23	h	R/W	HR041
S		S024	Noise reduction time slot: weekend minutes	30	0	59	min	R/W	HR042
S		S026	Compressor start-up delay after pump start	30	0	999	s	R/W	HR233
S		S027	Pump (source) shutdown delay after compressor shutdown	10	0	999	s	R/W	HR234
S		S029	Heating source fan: setpoint	10,0	0,0	99,9	°C/°F	R/W	HR237 (2R)
S		S035	Source fan: heating differential	5,0	0,0	99,9	K	R/W	HR248 (2R)
S		S039	Defrost: starting temperature	-1,0	-99,9	99,9	°C/°F	R/W	HR254 (2R)

S		S040	Defrost: reset threshold delay start defrost	1,0	S039	99,9	°C/ °F	R/W	HR256 (2R)
S		S041	Defrost: startup delay	30	0	999	min	R/W	HR258
S		S042	Defrost: finishing temperature	52,0	-999,9	999, 9	°C/ °F	R/W	HR259 (2R)
S		S043	Enabling defrost fluid 0/1=No/Yes	0	0	1	-	R/W	CS037
S		S044	Minimum operating time before cycle reversal	20	0	999	s	R/W	HR261
S		S045	Operating time at minimum power after cycle reversal	30	0	999	s	R/W	HR262
S		S046	Defrost: minimum duration	1	0	99	min	R/W	HR263
S		S047	Defrost: maximum duration	5	0	99	min	R/W	HR264
S		S048	Drip: duration 0 = Drip not performed	90	0	999	s	R/W	HR265
S		S049	Post-drip: duration 0 = post-drip not performed	30	0	999	s	R/W	HR266
S		S050	Minimum time between consecutive defrosts	20	0	999	min	R/W	HR267
S		S051	BLDC compressor speed in defrost	80,0	0,0	999, 9	rps	R/W	HR382 (2R)
S		S052	BLDC compressor speed for defrost cycle reversal	40,0	0,0	999, 9	rps	R/W	HR384 (2R)
S		S053	Defrost synchronization 0=Independent 1=Separated 2=Simultaneous	0	0	2	-	R/W	HR272
M		S054	4-way valve: pressure difference for reversal	3,0	0,0	999, 9	bar /psi	R/W	HR274 (2R)
M		S055	Compressor after defrosting 0/1=On/Off	0	0	1	-	R/W	CS038
S		S056	BLDC Smart Boot: duration (*)	20	0	999	s	R/W	HR278
S		S057	Anti-ice fountain; alarm threshold	-0,8	-999,9	999, 9	K/R	R/W	HR279 (2R)
S		S058	Anti-icing source: alarm differential	30,0	0,0	999, 9	K/R	R/W	HR281 (2R)
S		S059	Frost alarm delay at threshold -1K	30	0	999	s	R/W	HR283

S		S060	Source: external air temperature probe compensation	0,0	-99,9	99,9	K/R	R/W	HR284 (2R)
M		S061	Source fan: output logic 0/1=NA/NC	0	0	1	-	R/W	CS039
M		S062	Source pump: output logic 0/1=NA/NC	0	0	1	-	R/W	CS040
S		S063	Reversing valve: output logic 0/1=NA/NC	0	0	1	-	R/W	CS041
S		S068	Drive Type 0=Air 1=Water	0	0	1	-	R/W	CS046
S		S069	Defrost with fans: temperature threshold external - 0.0°C/32.0 - °F=Function disabled	0,0	0,0	99,9	-	R/W	HR736
S		S072	Source pump activation 0= On with unit on 1= On with compressor on 2= modulate on/off with condensing temperature	0	0	2	-	R/W	HR213
S		S073	Compressor status in defrost entry 0= Minimum speed ignition 1= Off	0	0	1	-	R/W	CS92

8.5.4 Inputs/outputs configuration

User	Code.	Description	Def.	Min	Max	U.O.M.	R/W	Modbus
S	Hc31	S1 configuration	7	0	8	-	R/W	HR752
S	Hc32	S2 configuration	8	0	8	-	R/W	HR753
S	Hc00	S3 configuration	0	0	8	-	R/W	HR286
M	S008	Source fan 1 circuit 1: maintenance hours threshold (X100)	99	0	999	h	R/W	HR214
M	Hc01	Configure S4 and S5 capacity 0=Pressure 1=Temperature	0	0	1	-	R/W	HR287
S	Hc02	Enabling S4 0/1=No/Yes	1	0	1	-	R/W	CS048
S	Hc34	S4 configuration	7	0	10	-	R/W	HR754
S	Hc35	S5 configuration	8	0	10	-	R/W	HR755
S	Hc03	S6 configuration	0	0	11	-	R/W	HR288

S	Hc04	S7 configuration (DIN)	6	0	8	-	R/W	HR289
S	Hc41	S1 configuration (Circuit 2)	0	0	8	-	R/W	HR756
S	Hc42	S2 configuration (Circuit 2)	0	0	8	-	R/W	HR757
S	Hc43	S3 configuration (Circuit 2)	0	0	8	-	R/W	HR758
S	Hc44	S4 configuration (Circuit 2)	7	0	10	-	R/W	HR759
S	Hc45	S5 configuration (Circuit 2)	8	0	10	-	R/W	HR760
S	Hc05	S6 configuration (Circuit 2)	0	0	11	-	R/W	HR290
S	Hc47	S7 configuration (Circuit 2)	6	0	8	-	R/W	HR761
S	Hc14	ID1 configuration	1	0	10	-	R/W	HR297
S	Hc07	ID5 configuration	7	0	10	-	R/W	HR292
S	Hc08	ID6 configuration	6	0	10	-	R/W	HR293
S	Hc16	ID1 configuration (Circuit 2)	10	0	10	-	R/W	HR299
S	Hc17	ID2 configuration (Circuit 2)	2	0	10	-	R/W	HR300
S	Hc09	ID4 configuration (Circuit 2)	0	0	10	-	R/W	HR294
S	Hc10	ID6 configuration (Circuit 2)	0	0	10	-	R/W	HR295
S	Hc11	ID6 configuration (Circuit 2)	0	0	10	-	R/W	HR296
S	Hc51	NO1 configuration	1	0	11	-	R/W	HR740
S	Hc52	NO2 configuration	2	0	11	-	R/W	HR741
S	Hc53	NO3 configuration	4	0	11	-	R/W	HR742
S	Hc55	NO5 configuration	7	0	11	-	R/W	HR744
S	Hc56	NO6 configuration	0	0	11	-	R/W	HR745
S	Hc61	NO1configuration (Circuit 2)	1	0	8	-	R/W	HR746
S	Hc62	NO2 configuration (Circuit 2)	2	0	8	-	R/W	HR747
S	Hc63	NO3 configuration (Circuit 2)	4	0	8	-	R/W	HR748
S	Hc64	NO4 configuration (Circuit 2)	7	0	8	-	R/W	HR749
S	Hc65	NO5 configuration (Circuit 2)	0	0	8	-	R/W	HR750
S	Hc66	NO6 configuration (Circuit 2)	0	0	8	-	R/W	HR751
S	Hc71	Y1 configuration	1	0	3	-	R/W	HR240
S	Hc81	Y1 configuration (Circuit 2)	1	0	2	-	R/W	HR244
S	Hc82	Y2 Configuration (Circuit 2)	0	0	2	-	R/W	HR276
S	Hc13	Buzzer 0/1=No/Yes	0	0	1	-	R/W	CS050

8.5.5 mCH2 parameters (Legacy models only)

User	Display	Code.	Description	Def.	Mín	Máx	U.O.M.	R/W	Modbus
M	X	F003	Number of evaporators (0=1; 1=2)	0	0	1	-	-	-
M	X	F007	S4 sensor installed in source exchanger (0= NO, 1=Yes: in CH it reads condensation, in HP it reads evaporation)	0	0	1	-	-	-
M	X	F008	Frost alarm delay	10	0	999	-	-	-

M	X	F009	Air Supply Limit Temperature Threshold	14,0	0,0	99,9	°C	-	-
M	X	F010	Air drive limit temperature differential	4,0	0,0	20,0	K	-	-
M	X	F011	Digital output logic resistance (0=N.A; 1=N.C.)	0	0	1	-	-	-
M	X	F012	Setpoint compensation in summer operating mode for resistors	1,0	0,0	99,9	K	-	-
M	X	F013	Differential over the setpoint in summer operating mode for resistors	0,5	0,2	99,9	K	-	-
M	X	F014	Compensation on the setpoint in winter operating mode for resistors	3,0	0,0	99,9	K	-	-
M	x	F015	Differential over the setpoint in operating mode winter for Resistances	1,0	0,2	99,9	K	-	-
M	X	F016	Active resistors during defrost (0= No, 1=Yes)	0	0	1	-	-	-
M	X	F017	Drive fan operating mode (0=Always ON; 1=ON by thermoregulation)	0	0	1	-	-	-
M	X	F018	Hot-start setpoint	40,0	0,0	99,9	°C	-	-
M	X	F019	Hot-keep differential	5,0	0,0	99,9	K	-	-
M	X	F020	Compressor demand logic from digital input (0=N.C.; 1=N.A.)	1	0	1	-	-	-
M	X	F021	Calibration of the temperature probe of the mixing outlet water (S1 expansion)	0,0	-99,9	99,9	K	-	-
M	X	F022	Calibration of the water outlet temperature probe evaporator 2 (S2 expansion)	0,0	-99,9	99,9	K	-	-

M	X	F023	Direct relationship between digital inputs and digital outputs for condenser motor unit (0=No; 1=Yes)	0	0	1	-	-	-
M	X	F024	Manual resistance management 1 (0=AUTO; 1= OFF; 2=ON)	0	0	2	-	-	-
M	X	F025	Manual resistance management 2 (0=AUTO; 1= OFF; 2=ON)	0	0	2	-	-	-
M	x	F026	Deactivation of compressors due to low external temperature Air/Air)	-40,0	-40,0	99,9	°C	-	-
M		F028	Air heating: temperature regulation probe of the Supply resistors 0 =ENVIRONMENT 1 =DRIVE	FAKE	-	-	-	R/W	CS94

8.6 Parameters with assigned value

-This depends on the type of unit needed-

8.6.1 System

Code	**Description**	**Def.**	MAP.	Min.	Max.	UOM	**R/W**	Modbus
U006	Refrigeration setpoint: minimum limit	5.0	7.0	-99.9	999.9	°C/°F	R/W	HR007(2R)
U007	Refrigeration setpoint: maximum limit	20.0	30.0	-99.9	999.9	°C/°F	R/W	HR009(2R)
U021	Time slot: weekend minutes	0	30	0	59	min	R/W	HR030
U031	High water temperature alarm: compensation	10,0	30.0	0,0	99,9	K/R	R/W	HR049(2R)

U032	High water temp alarm: start-up delay	15	5	0	99	min	R/W	HR051
U033	High water temperature alarm: speed delay	180	12	0	999	s	R/W	HR052
U036	Start-up regulation probe 0=Return 1=Drive	0	1	0	1	-	R/W	CS006
U038	Regulation probe in operation 0=Return 1=Drive	1	1	0	1	-	R/W	CS007
U039	Boot PID: Kp	6,0	34.0	0,0	999,9	-	R/W	HR055(2R)
U040	Boot PID: Ti 0: Comprehensive Action Disabled	180	0	0	999	s	R/W	HR057
U041	Regime PID: Kp	10,0	0	0,0	999,9	-	R/W	HR059(2R)
U042	Regime PID: Kp	10,0	34.0	0,0	999,9	-	R/W	HR059(2R)
U043	Regime PID: Ti 0: comprehensive action disabled	120	0	0	999	s	R/W	HR061
U044	Td 0 regime PID: derivative action disabled	3	0	0	99	s	R/W	HR062
U046	Supply pump alarm: delay regime	3	10	0	99	s	R/W	HR064
U050	Anti-freeze supply side: alarm threshold	-0,8	4	-99,9	999,9	°C/°F	R/W	HR068 (2R)
U051	Anti-freeze supply side: differential	30,0	2.0	0,0	999,9	K/R	R/W	HR070 (2R)
U060	Supply pump flow switch: input logic 0/1=NC/NA	0	1	0	1	-	R/W	CS011
U061	Supply pump overload: input	0	1	0	1	-	R/W	CS012

	logic 0/1=NC/NA							
U077	Drive Type 0=CH 1=HP 2=CH/HP 3=CH condenser motor unit 4=CH HP Condenser Motorbike Unit	0		0	4	-	R/W	HR098
U082	Type of anti-icing control 0 = Evaporation temperature 1 = Impulse water temperature	0	1	0	1	-	R/W	CS093

8.6.2 Compressor

Code	**Description**	**Def.**	MAP.	Min.	Max.	UOM	**R/W**	Modbus
C012	Minimum compressor ignition time	180	60	30	999	s	R/W	HR162
C013	Minimum compressor shutdown time	60	120	30	999	s	R/W	HR163
C014	Min. time between consecutive compressor ignitions	360	300	300	999	s	R/W	HR164
C018	Minimum low pressure (LP) threshold	0,2	3.5	-99,9	99,9	bar/psi	R/W	HR326 (2R)
C037	Evaporation pressure: probe type 0=0...5 V 1=4...20 mA	0		0	1	-	R/W	HR194
C040	Condensation pressure:	0		0	1	-	R/W	HR199

	probe type 0=0...5 V 1=4...20 mA							
C046	Number of circuits in the unit	1		1	2	-	R/W	HR206
C047	Type of compressors used 0=1 On/Off 1=2 On/Off 2=1 BLDC 3=1BLDC+On/Off	0		0	3	-	R/W	HR207
C049	BP pressure switch: alarm delay from boot of the compressor If C049 = 0 the alarm goes off even if the compressors are turned off. If C049>0, the alarm only goes off with the compressors On	90	60	0	999	-	R/W	HR269

8.6.3 Source

Code	Description	Def.	MAP.	Min.	Max.	U.O.M.	R/W	Modbus
S025	Source fan: noise reduction setpoint	45,0	15.0	0,0	999,9	°C/°F	R/W	HR231 (2R)
S028	Cooling source fan: setpoint	30,0	29	-999,9	999,9	°C/°F	R/W	HR235 (2R)
S031	Cooling source fan: setpoint at start-up	45,0	29	0,0	999,9	°C/°F	R/W	HR241 (2R)
S032	Source fan: cooling boot delay	240	5	0	999	s	R/W	HR243
S034	Source fan: cooling differential	15,0	5	0,0	99,9	K	R/W	HR246 (2R)
S036	Modulating source fan: min speed value	20,0	0	0,0	100,0	%	R/W	HR250 (2R)
S037	Modulating source fan: max speed value	80,0	100	0,0	100,0	%	R/W	HR252 (2R)

S064	Type of source air circuit 0=Independent 1=Common	0		0	1	-	R/W	CS042
S065	Source fan type 0/1=Modulating/ON/OFF	0		0	1	-	R/W	CS044

8.6.4 Input/output configuration

Code	**Description**	**Def.**	MAP.	Min.	Max.	U.O.M.	**R/W**	Modbus
HC15	ID2 configuration	2	9	0	10	-	R/W	HR298
HC06	ID4 configuration	0	4	0	10	-	R/W	HR291
HC54	NO4 configuration	7	5	0	11	-	R/W	HR743
HC72	Y2 configuration	3	0	0	3	-	R/W	HR245

8.6.5 mCH2 parameters (Legacy models only)

Code	**Description**	**Def.**	MAP.	Min.	Max.	U.O.M.	**R/W**	Modbus
F027	Partial compressors (0= NO 1= YES)	0	1	0	1	-	R/W	-
F027	Partial compressor rating 0/1=No/Yes	0	1	0	1	-	R/W	CS49

8.7 ALARMS AND SIGNS

8.7.1 Types of alarms

The alarms managed by the control are of three types, depending on the restore mode:

• A - automatic: the alarm is reset and the interested device automatically resets when the alarm condition ceases.

• R - semi-automatic: if the alarm condition occurs several times, the alarm is converted to manual restoration and the intervention of an operator is necessary to restart the device.

• M - manual: the intervention of an operator is necessary to restart the device.

Alarms requiring technical support indicate the request on the display by flashing the key icon. The icon of the ignited key indicates that a device has reached the scheduled threshold of the number of operating hours, and maintenance intervention is necessary (the alarm code indicates which device is concerned).

The restoration of some alarms can be done by means of a parameter. The alarms with figureless are:

- High pressure switch
- Low pressure switch
- Anti-icing alarm

User M	CODE. U081	Description With pressure alarm reset 0 = High pressure switch, low pressure switch, anti-icing: all in manual reset. 1 = High pressure switch, low pressure switch, anti-icing: all in automatic restart. 2 = High pressure switch and anti-icing in manual restart, low pressure switch in automatic restart. 3 = High pressure switch in manual restart, low pressure switch and anti-icing in automatic restart. 4 = High pressure switch and low-pressure switch in manual restart, anti-icing in automatic restart. 5 = High pressure switch and low-pressure switch in semi-automatic restart, anti-icing in automatic restart. 6 = High pressure switch and low-pressure switch in semi-automatic restart, anti-icing in manual restart. 7 = High pressure switch and anti-icing in Manual restart, low pressure switch in semi-automatic restart.	Def. 7	Min. 0	Max. 7	U.O.M. -

8.7.1.1 Alarms presence

Note: Only active alarms without a password or those dedicated to the initialization of the unit and its optimization are accessed through the user terminal. The presence of an alarm is signaled by activating the buzzer and turning on the flashing alarm icon. Pressing Alarm silences the buzzer and displays the alarm code (on the top line) and possible additional information (on the bottom line). The activation of the alarm is recorded in the alarm log. If the alarm is restored automatically, the alarm key is turned off, the alarm code disappears from the list and the alarm finization event is transcribed into the alarm log.

Procedure (alarm recognition):

1. press Alarm: the buzzer is muted; the alarm code appears on the display;

2. press UP/DOWN to scroll through the list of alarms;

3. Once the display is complete, select Esc and press PRG to exit.

Procedure

In the presence of an alarm, the buzzer is activated and the Alarm key lights up.

Pressing the Alarm key silences the buzzer and displays the alarm code. Pressing UP/DOWN scrolls through the list of other possible alarms.

If the end of the alarm list is reached, "ESC" appears: pressing the PRG key exits the alarm list. If the end of the alarm list is reached, "ESC" appears: pressing the PRG key exits the alarm list.

Pressing the Alarm key for more than 3 s resets the alarms: the not All text indicates that there are no more active alarms. Pressing the PRG key leaves the alarm list.

An alarm can be reset by pressing Alarm for more than 3 s. If the condition that generated the alarm still exists, the alarm is reactivated. You can cancel the alarm log using the ClrH parameter, which can be accessed from the Service level from the terminal or from APPLICA via smartphone, with BLE connection, via the specific command on the alarm page (it is necessary to access the "Assistance" level). The same operations can be performed by acting from APPLICA via smartphone using the specific commands on the alarm page (BLE connection is required by accessing the "Assistance" level).

Notes:

• The operation of canceling the alarm log is irreversible.

• See the Functions chapter for alarm parameters: evaporator outlet temperature, anti-icing, compressor.

• The buzzer is activated with all alarms.

8.7.2 Alarms list

Code.	Description	Reset	Effect	Priority	Retard	Number of events	Eval. (s)
A01	Unit: number of writes to permanent memory	M	-	Anomaly	No	-	-
A02	Drive: writes to permanent memory	M	-	Anomaly	No	-	-
A03	Unit: remote alarm by digital input	M	Turn off the unit	Severe unit	No	-	-
A04	Unit: remote setpoint probe	A	Use standard setpoint	Anomaly	10 s	-	-
A05	Unit: user return water temperature probe	A	Turn off the unit	Severe unit	10 s	-	-
A06	Unit: temperature probe water supply impulsion.	A	Turn off the unit	Severe unit	10 s	-	-
A08	Unit: overload pump supply 1	M	-	Anomaly	No	-	-
A09	Unit: overload pump supply 2	M	-	Anomaly	No	-	-
A10	Unit: fl ow switch (with user pump 1 active)	M	Turn off the unit	Severe unit	Param. U045/U046	-	-
A11	Unit: fl ow switch (with user pump 2 active)	M	Turn off the unit	Severe unit	Param. U045/U046	-	-
A12	Unit: supply pump group	M	Turn off the unit	Severe unit	No	-	-
A13	Unit: pump maintenance supply 1	A	Anomaly	Parameter.	U000	-	-
A14	Unit: pump maintenance supply 2	A	-	Anomaly	Param. U003	-	-
A15	Unit: high temperature of chilled water	A	-	Anomaly	Param. U032/U033	-	-
A16	Unit: source return temperature probe water/air	A	Disables FC and Compensation (A/W Drive)	Anomaly	10 s	-	-

A17	Unit: Pump maintenance source 1	A	-	Severe unit	Param. S000	-	-
A18	Unit: Free cooling warning	M	Disables FC	Anomaly	Param. U032/ 80s	-	-
A19	Circuit 1: condensing pressure probe	A	Turn off circuit 1	Severe circuit 1	10 s	-	-
A20	Circuit 1: condensing temperature probe	A	Turn off circuit 1	Severe circuit 1	10 s	-	-
A21	Circuit 1: evaporative pressure probe	A	Turn off circuit 1	Severe circuit 1	10 s	-	-
A22	Circuit 1: evaporation temperature probe	A	Turn off circuit 1	Severe circuit 1	10 s	-	-
A23	Circuit 1: discharge temperature probe	A	Turn off circuit 1	Severe circuit 1	10 s	-	-
A24	Circuit 1: suction temperature probe	A	Turn off circuit 1	Severe circuit 1	10 s	-	-
A25	Circuit 1: Low pressure switch	Parameter U081.	Turn off circuit 1	Severe circuit 1	No	-	-
A26	Circuit 1: High pressure/high temperature transducer condensation	M	Turn off circuit 1	Severe circuit 1	No	-	-
A27	Circuit 1: Low pressure transducer	A (R)	Turn off circuit 1	Severe circuit 1	No	3	3600
A28	Circuit 1: anti-icing temperature	Param. U081	Turn off circuit 1	Severe circuit 1	Param. U052	-	-
A29	Circuit 1: Low pressure switch	Param. U081	Turn off circuit 1	Severe circuit 1	Param. C049, C050	3	3600
A30	Circuit 1: compressor overload 1	M	compressor. 1 stops Circ. 1	Anomaly circuit 1	No	-	-

A31	Circuit 1: compressor overload 2	M	compressor. 2 stops Circ. 1	Anomaly circuit 1	No	-	-
A32	Circuit 1: compressor maintenance 1	A	-	Anomaly circuit 1	Param. C000	-	-
A33	Circuit 1: Compressor Maintenance 2	A	-	Anomaly circuit 1	Param. C003	-	-
A34	Circuit 1: Source fan maintenance	A	-	Anomaly circuit 1	Param. S008	-	-
A35	EVD circuit 1: LowSH	M	Turn off circuit 1	Severe circuit 1	Param. E024	-	-
A36	EVD circuit 1: LOP	A	-	Anomaly circuit 1	Param. E025	-	-
A37	EVD circuit 1: MOP	A	Turn off circuit 1	Severe circuit 1	Param. E026	-	-
A38	EVD circuit 1: motor error	M	Turn off circuit 1	Severe circuit 1	No	-	-
A39	EVD circuit 1: emergency shutdown	A	-	Anomaly circuit 1	No	-	-
A40	EVD circuit 1: incomplete valve closure	A	-	Anomaly circuit 1	No	-	-
A41	EVD circuit 1: disconnection	A	Turn off circuits 1 and 2	Severe circuit 1 and 2	30 s	-	-
A42	Circuit 1: envelope alarm + alarm zone	A (R)	Turn off circuit 1	Severe circuit 1	Param. P003	3	3600
A43	BLDC circuit 1: high pressure difference in outburst	A	Does not allow BLDC 1 boot	Severe circuit 1	5 min	-	-
A44	BLDC circuit 1: failed boot	A (R)	-	Severe circuit 1	45 s	5	3600
A45	BLDC circuit 1: low pressure difference	A	Turn off circuit 1	Severe circuit 1	Param. P004	-	-
A46	BLDC circuit 1: high temp. discharge gas	M	Turn off circuit 1	Severe circuit 1	No	-	-

A47	Speed drive 1: disconnected	A	Turn off circuit 1 / BLDC 1	Severe circuit 1	30 s	-	-
A48	Speed drive 1: alarm + error code	A (R)	Turn off circuit 1 / BLDC 1	Severe circuit 1	No	3	3600
A49	Unit: circuit 2 disconnected	A	-	Severe circuit 2	30 s	-	-
A50	Unit circuit 2: nº writes permanent memory	M	-	Anomaly	No	-	-
A51	Circuit 2 unit: permanent memory writes	M	-	Anomaly	No	-	-
A52	Circuit 2: condensing pressure probe	A	Turn off circuit 2	Severe circuit 2	10 s	-	-
A53	Circuit 2: condensing temperature probe	A	Turn off circuit 2	Severe circuit 2	10 s	-	-
A54	Circuit 2: evaporative pressure probe	A	Turn off circuit 2	Severe circuit 2	10 s	-	-
A55	Circuit 2: evaporation temperature probe	A	Turn off circuit 2	Severe circuit 2	10 s	-	-
A56	Circuit 2: discharge temperature probe	A	Turn off circuit 2	Severe circuit 2	10 s	-	-
A57	Circuit 2: suction temperature probe	A	Turn off circuit 2	Severe circuit 2	10 s	-	-
A58	Circuit 2: high pressure switch	Param. U081.	Turn off circuit 2	Severe circuit 2	No	-	-
A59	Circuit 2: high condensing pressure/temperature transducer	M	Turn off circuit 2	Severe circuit 2	No	-	-
A60	Circuit 2: low pressure transducer	A (R)	Turn off circuit 2	Severe circuit 2	No	3	3600

A61	Circuit 2: frost protection evaporation temperature	Param. U081	Turn off circuit 2	Severe circuit 2	Param. U052	-	-
A62	Circuit 2: low pressure switch	Param. U081	Turn off circuit 2	Severe circuit 2	Param. C049, C050	3	3600
A63	Circuit 2: compressor 1 overload	M	Stops compress or.1 Circ.2	Anomaly circuit 2	No	-	-
A64	Circuit 2: compressor 2 overload	M	Stops compress or.2 Circ.2	Anomaly circuit 2	No	-	-
A65	Circuit 2: compressor 1 maintenance	A	-	Anomaly	Param. C006	-	-
A66	Circuit 2: compressor 2 maintenance	A	-	Anomaly	Param. C003	-	-
A67	Circuit 2: source fan maintenance	A	-	Anomaly	Param. S012	-	-
A68	EVD circuit 2: LowSH	M	Turn off circuit 2	Severe circuit 2	Param. E024	-	-
A69	EVD circuit 2: LOP	A	Turn off circuit 2	Severe circuit 2	Param. E025	-	-
A70	EVD circuit 2: MOP	A	Turn off circuit 2	Severe circuit 2	Param. E026	-	-
A71	EVD circuit 2: motor error	M	Turn off circuit 2	Severe circuit 2	No	-	-
A72	EVD circuit 2: emergency closing	A	Turn off circuit 2	Severe circuit 2	No	-	-
A73	EVD circuit 2: incomplete valve closing	A	Turn off circuit 2	Severe circuit 2	No	-	-
A74	EVD circuit 2: off line	A	Turn off circuit 2	Severe circuit 2	30 s	-	-
A75	Circuit 2: envelope alarm + zone alarm	A (R)	Turn off circuit 2	Severe circuit 2	Param. P003	3	3600
A76	BLDC circuit 2: high pressure diff erential at start-up	A	Does not allow BLDC 2 boot	Severe circuit 2	5 min	-	-
A77	BLDC circuit 2: failed start-up	A (R)	-	Severe circuit 2	45	5	3600

A78	BLDC circuit 2: low pressure diff erential	A	Turn off circuit 2	Severe circuit 2	P004	-	-
A79	BLDC circuit 2: high gas discharge temp.	M	Turn off circuit 2	Severe circuit 2	No	-	-
A80	Speed drive circuit 2: off line	A	Does not allow BLDC 2 boot	Severe circuit 2	30 s	-	-
A81	Speed drive circuit 2: alarm +code error	A (R)	Does not allow BLDC 2 boot	Severe circuit 2	No	3	3600
A87	Unit: EVD Evolution not compatible	A	Shutdown unity	Severe unity	No	-	-

9 DRIVE FOR ELECTRONIC EXPANSION VALVE

9.1 INTRODUCTION

The drivers of the EVDRIVE04 series are devices studied for the management of bipolar stepper electronic expansion valves.
They are available in built-in and blind version (according to the model).
The user interface of the built-in versions consists of a LCD graphic display, of six buttons and guarantees an index of protection IP40.
The blind versions must be used with a remote user interface.
They can be powered both in alternating and in direct current (24 VAC/DC).
The drivers can work with the most common temperature probes (NTC and Pt 1000) and with the most common pressure transducers (0-20 mA, 4-20 mA, 0-5 V ratiometric and 0-10 V).
They have configurable digital inputs (enable the operation, change parameters set, backup module status, etc.) and a 5 res. A @ 250 VAC digital output (electromechanical relay) configurable as alarm output, solenoid valve or resynchronization valve.
Through the USB port it is possible to make the upload and the download of the configuration parameters (using a common USB flash drive); through this port (or the RS-485 one), it is also possible to connect the devices to the setup software system Parameters Manager (through a serial interface).
Through the CAN communication port (or the RS-485 one) it is possible to connect the devices to a controller or to a remote user interface instead.
Through the backup module EPS4B it is finally possible to close the valve in case of lack of power supply of the drivers.
Installation is on DIN rail.
Among the several functions one highlights the possibility to work both in stand alone mode and under the supervision of a controller, the management both of generic electronic expansion valves and of the most common valves Sporlan, Alco, Danfoss, Sanhua, Castel and the management of the backup probes.

9.2 DESCRIPTION

The following drawing shows the aspect of EVDRIVE04.

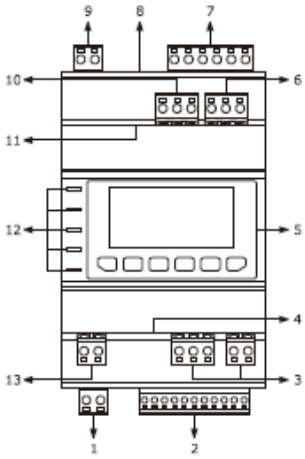

The following table shows the meaning of the parts of EVDRIVE04.

Part	Meaning
1	digital output
2	analog inputs and free of voltage digital inputs
3	CAN port (not available in model EPD4BX4)
4	CAN port line termination (not available in model EPD4BX4)
5	display and keyboard (not available in models EPD4BX4, EPD4BC4 and EPD4BF4)
6	reserved
7	bipolar stepper motor output
8	USB port
9	power supply
10	RS-485 port (not available in models EPD4BX4 and EPD4BC4)
11	RS-485 port line termination (not available in models EPD4BX4 and EPD4BC4)
12	signalling LEDs
13	high voltage digital input (not available in model EPD4BX4)

9.3 ELECTRICAL CONNECTION

The following drawing shows the EVDRIVE04 connectors

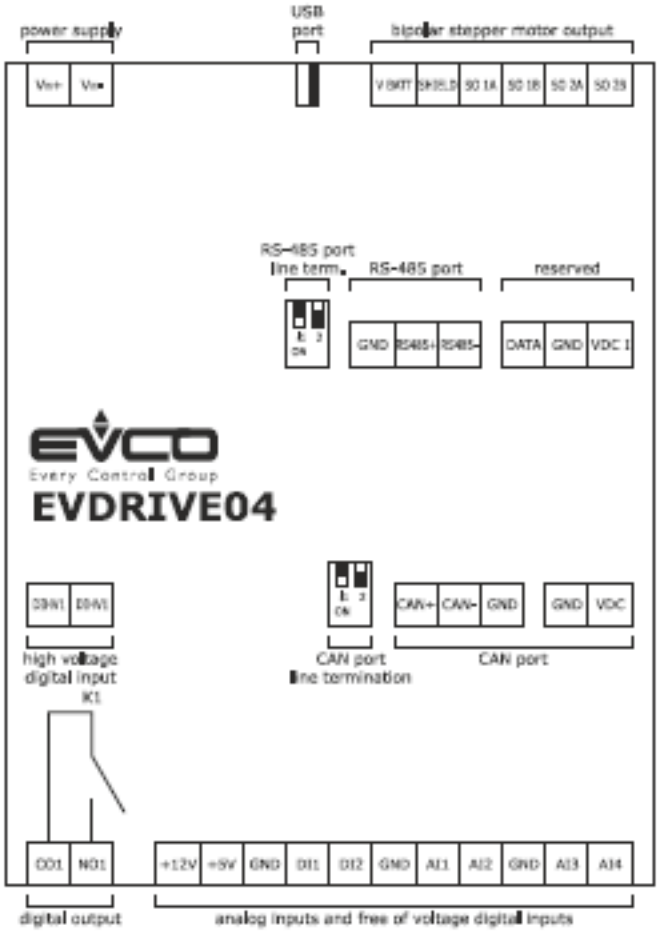

The following tables show the meaning of the connectors;

9.4 DIGITAL OUTPUT

Electromechanical relay.

Terminal	Meaning
CO1	common digital output
NO1	normally open contact digital output

9.5 ANALOG INPUTS AND FREE OF VOLTAGE DIGITAL INPUTS

9.6 CAN port (not available in model EPD4BX4)

Terminal	Meaning
CAN+	signal +
CAN-	signal -
GND	ground
VDC	power supply remote user interface (22... 35 VDC, 100 mA max.)
Part	**Meaning**
+12V	power supply 0-20 mA/4-20 mA/0-10 V transducers (12 VDC ±10%, 60 mA max.)
+5V	power supply 0-5 V ratiometric transducers (5 VDC ±5%, 40 mA max.)
GND	ground analog inputs and free of voltage digital inputs
DI1	digital input 1 (non optoisolated free of voltage contact; 5 V when not loaded, 3.3 mA when loaded)
DI2	digital input 2 (non optoisolated free of voltage contact; 5 V when not loaded, 3.3 mA when loaded)
GND	common analog inputs and free of voltage digital inputs
AI1	analog input 1 (which can be set via configuration parameter for NTC/Pt 1000 probes and for 0-20 mA/4-20 mA)
AI2	analog input 2 (which can be set via configuration parameter for NTC/Pt 1000 probes and for 0-20 mA/4-20 mA/0-5 V ratiometric transducers)
GND	common analog inputs and free of voltage digital inputs
AI3	analog input 3 (which can be set via configuration parameter for NTC/Pt 1000 probes)
AI4	analog input 4 (which can be set via configuration parameter for 0-20 mA/4-20 mA/0-5 V ratiometric/0-10 V transducers)

- the maximum number of devices that can make a CAN network (32) depends on the bus load; the bus load depends on the baud rate of the CANBUS communication and on the kind of device in the network (for example: a CAN network can be made of a programmable controller, of four I / O expansions and of four user interfaces with baud rate 500,000 baud)
- connect the CAN port using a twisted pair
- do not connect more than four I / O expansions.

For the settings about the CAN port look at chapter 7 “CONFIGURATION”.

9.7 CAN port line termination (not available in model EPD4BX4)

Position microswitch 2 on position on (120 W, 0.25 W) to plug in the CAN port line termination (plug in the termination of the first and of the last element of the network).

9.8 BIPOLAR STEPPER MOTOR OUTPUT

Terminal	Meaning
V BATT	backup power supply input
SHIELD	common bipolar stepper motor shielded cable
SO 1A	bipolar stepper motor coil 1
SO 1B	bipolar stepper motor coil 1
SO 2A	bipolar stepper motor coil 2
SO 2B	bipolar stepper motor coil 2

With reference to the previous table, the following one shows how to connect to EVDRIVE04 the most common electronic expansion valves Sporlan and Alco.

Terminal	Wire (color)			
	Sporlan SER, SEI, SEH and ESX	Alco EXM/EXL-246	Alco EX4, EX5, EX6, EX7 and EX8	Danfoss ETS
SO 1A	green wire	blue wire	blue wire	green wire
SO 1B	red wire	yellow wire	brown wire	red wire
SO 2A	black wire	white wire	white wire	white wire
SO 2B	white wire	orange wire	black wire	black wire

9.9 POWER SUPPLY

Terminal	Meaning
V≅+	power supply device (not isolated; 24 VAC +10% -15%, 50/60 Hz ±3 Hz, 40 VA max. or 24... 37 VDC, 22 W max.)
V≅-	power supply device (not isolated; 24 VAC +10% -15%, 50/60 Hz ±3 Hz, 40 VA max. or 24... 37 VDC, 22 W max.)

- protect the power supply with a fuse rated 2 A-T 250 V
- if the device is powered in direct current, it is necessary to respect the polarity of the power supply voltage.

9.10 RS-485 PORT (not available in models EPD4BX4 and EPD4BC4)

Non optoisolated RS-485 port, with MODBUS communication protocol.

Terminal	Meaning
GND	ground
RS485+	D1 = A = + (terminal 1 of the transceiver)
RS485-	D0 = B = - (terminal 0 of the transceiver)

- connect the RS-485 MODBUS port using a twisted pair.

For the settings about the RS-485 MODBUS port look at chapter 7 “CONFIGURATION”.

9.11 RS-485 PORT LINE TERMINATION (not available in models EPD4BX4 and EPD4BC4)

Position microswitch 1 on position on (120 W, 0.25 W) to plug in the RS-485 port line termination (plug in the termination of the first and of the last element of the network).

9.12 HIGH VOLTAGE DIGITAL INPUT

High voltage digital input (if present).

Part	Meaning
DIHV1	high voltage digital input (optoisolated contact; 115 VAC -10%... 230 VAC +10%)
DIHV1	high voltage digital input (optoisolated contact; 115 VAC -10%... 230 VAC +10%)

9.13 EXAMPLE OF ELECTRICAL CONNECTION

The following drawing shows an example of electrical connection of EVDRIVE04.

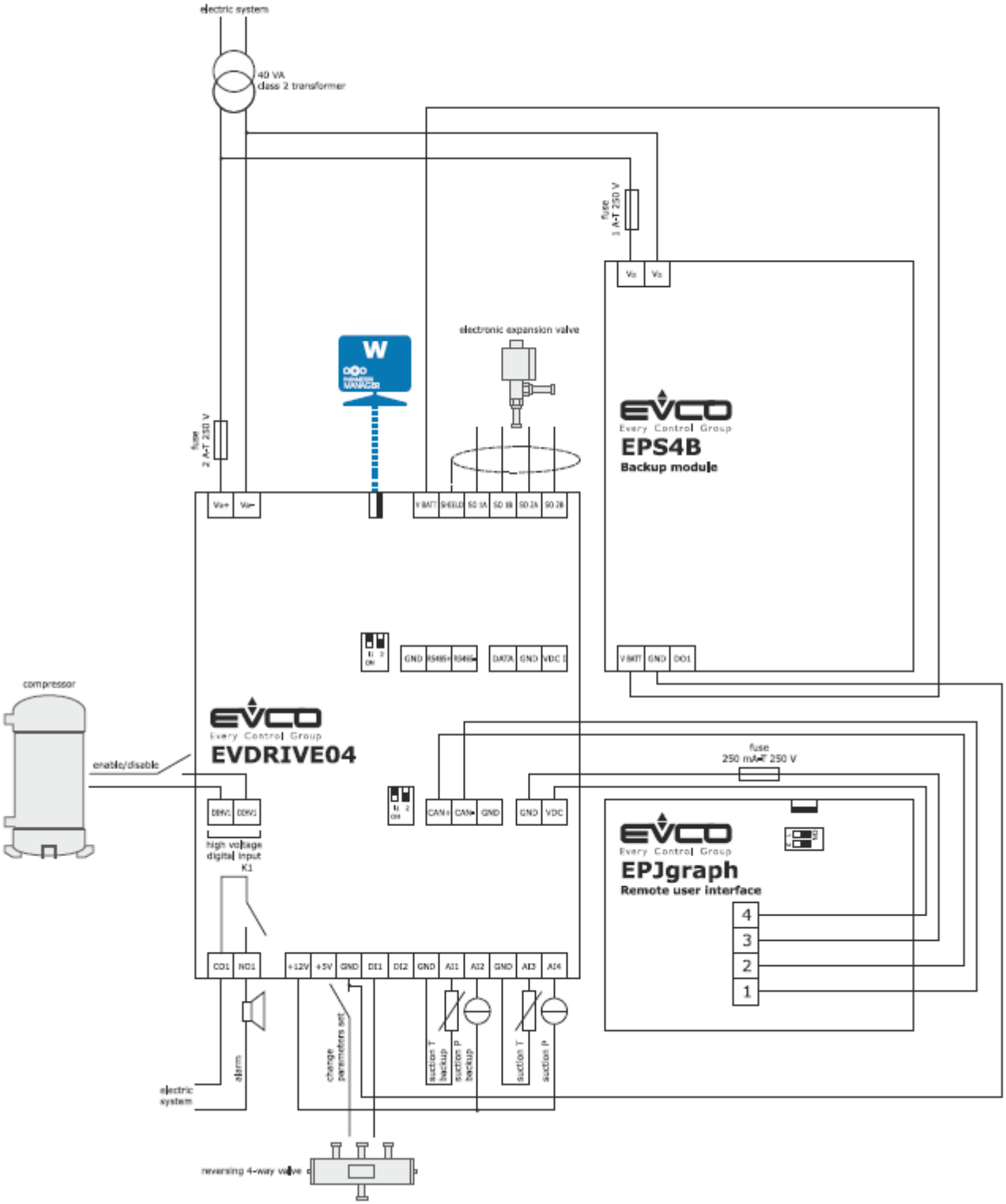

Please note the power supply of EVDRIVE04 and that of EPS4B are not isolated one another: it is important to wire correctly the devices as indicated in the drawing.

9.14 ADDITIONAL INFORMATION FOR ELECTRICAL CONNECTION

- do not operate on the terminal blocks of the device using electrical or pneumatic screwers
- if the device has been moved from a cold location to a warm one, the humidity could condense on the inside; wait about an hour before supplying it
- make sure the power supply voltage, the electrical frequency and the electrical power of the device correspond to those of the local power supply; look at chapter 11 “TECHNICAL DATA”
- disconnect the power supply of the device before servicing it
- do not use the device as safety device
- for the repairs and for information about the device please contact the EVCO sales network.

9.15 USER INTERFACE

9.15.1 Preliminary information

EVDRIVE04 is available in built-in and blind version (according to the model).
The built-in versions can be programmed through the user interface, the blind ones must be used with a remote user interface (for example EPJgraph): both the versions can be programmed through the set-up software system Parameters Manager; look at chapter 7 “CONFIGURATION”.
Using a common USB flash key it is also possible to make the upload and the download of the configuration parameters.

9.15.2 Keyboard (not available in the blind versions)

The following table shows the meaning of the keyboard.

Button	Preset function
	cancel, hereinafter also called “button ESC”
	move to left, hereinafter also called “button LEFT”
	increase, hereinafter also called “button UP”
	decrease, hereinafter also called “button DOWN”
	move to right, hereinafter also called “button RIGHT”
	confirmation, hereinafter also called “button ENTER”

9.15.3 Signalling LEDs

The following table shows the meaning of the LEDs at the front of the device.

LED	Meaning
ON	LED power supply if it is lit, the device will be powered if it is out, the device will not be powered
STEP 1	LED stepper output 1 if it is lit, the valve will be stopped and completely closed if it flashes slowly, the valve will be stopped and completely open if it flashes quickly, the valve will be moving if it is out, the valve will be stopped and open in an intermediary position

STEP 2	LED auxiliary if parameter Ph80 = 0, LED status if it is lit, the device will be working in superheating algorithm modality if it flashes slowly, the device will be working in manual or in debugger modality if it flashes quickly, the device will be working in analog positioner modality if it is Off, the device will be in a different status if parameter Ph80 = 1, LED MOP/LOP alarm if it flashes quickly, the MOP alarm will be running if it flashes slowly, the LOP alarm will be running if it is out, no MOP/LOP alarm will be running if parameter Ph80 = 2, LED high superheating/low superheating alarm if it flashes quickly, the high superheating alarm will be running if it flashes slowly, the low superheating alarm will be running if it is out, no high superheating/low superheating alarm will be running
⚠	LED alarm if it is On, an alarm will be running if it flashes slowly, it is necessary to disable the device so that the modification of the configuration parameters has effect if it flashes quickly, it is necessary to switch off/on the power supply of the device so that the modification of the configuration parameters has effect if it is Off, no alarm will be running
COM	LED communication if it is ON, a device-controller communication alarm will be running and the valve is halted or if there is activity on the USB port if it flashes slowly, the device-controller communication will be in the warning status if it flashes quickly, a device-controller communication alarm will be running and the device will be working in stand alone modality if it is OFF, the device will be working in stand alone modality or no device-controller communication alarm will be running

9.16 OPERATION

9.16.1 Switch on and resynchronization

At switch-on and after a resynchronization, the fundamental parameters for moving the motor are acquired.
The parameters of pressure and temperature units of measure are loaded at switch-on, and, if necessary, is performed the conversion of all the parameters of pressure and temperature.
The parameters that are loaded only during the initialization phase, and therefore require a reset to be loaded, are referred to as manufacturer parameters (Manufacturer menu) and can be modified only in the stand-by state.

9.16.2 Refrigerant selection

Parameter *Type of refrigerant* (Pi00) allow to select the proper gas for the application.

Pi00	Gas	Min. pressure [BarA]	Min. temperature [°C]	Max. pressure [BarA]	Max. temperature [°C]
0	R22	0.00	-75.9	49.88	96.1
1	R134A	0.00	-98.0	40.57	101.0
2	R402A	0.00	-80.8	40.66	74.1
3	R404A	0.00	-79.4	36.81	71.4
4	R407A	0.00	-72.0	43.59	81.1
5	R407C	0.00	70.4	45.30	85.5
6	R410A	0.00	-70.5	48.91	71.2
7	R417A	0.00	-68.5	37.91	84.4
8	R422A	0.00	-77.3	31.15	63.5
9	9R422D	0.00	-72.0	37.23	77.6
10	R507A	0.00	-80.8	36.88	70.4
11	R744	0.00	-56.5	73.75	30.9
12	R438A	0.00	-70.1	40.43	82.8
13	R401B	0.00	-64.9	46.01	105.0
14	R290	0.50	-56.9	42.00	96.0
15	R717	1.00	-33.5	112.77	131.9
16	R1270	0.00	-121.8	46.50	92.2
17	R32	0.00	-119.9	57.50	77.8
18	R407F	1.00	-39.7	32.00	65.5
19	R1234ZE	0.27	-45.6	17.57	73.9
20	R1234YF	0.32	-52.8	33.82	94.6
21	R723	0.10	-73.8	39.99	76.9
22	R452A	0.22	-70.0	35.40	70.0
23	R513A	0.20	-60.0	33.04	90.0
24	R454B	1.00	-50.2	42.63	68.3
25	R448A	0.17	-70.0	32.52	70.0
26	R449A	0.16	-70.0	31.59	70.0
27	R23	1.14	-80.0	46.99	25.0

9.16.3 Valve selection

To select the desired valve, it is necessary to set the correct value in Valve selection (parameter Pi07).
Setting this parameter to a value of 0 (generic valve) means setting the parameters Pr50 to Pr55 is required, with which it is possible to specify the value of each valve parameter.

With function “Copy selected to generic valve” it is possible to copy the default values of the selected valve into the ones of the generic valve, in order to use them as reference for possible modifications.
If a predefined valve is selected (parameter Pi07 > 0), all relevant parameters specific to that valve are loaded automatically from the flash memory, according to the table below:

Pi07	Valve name	Minimum regulation steps [step]	Maximum regulation steps [step]	Overdriving steps [step]	Stepping rate [step/s]	Operating phase current [mA]	Holding phase current [mA]	Recommended Step Mode
0	Generic valve	0	0	0	0	0	0	Full step 2ph
1	Sporlan CO2	0	2500	3125	400	275	0	Full step 2ph
2	Sporlan SER AA Sporlan SER A Sporlan SER B Sporlan SER C Sporlan SER D	0	2500	3500	400	120	0	Full step 2ph
3	Sporlan SERI F Sporlan SERI G Sporlan SERI J Sporlan SERI K Sporlan SERI L	0	2500	3500	400	120	0	Full step 2ph
4	Sporlan SER 1.5 to 20	0	1596	3500	400	160	0	Full step 2ph
5	Sporlan SEI 0.5 to11	0	1596	3500	400	160	0	Full step 2ph
6	Sporlan SEI 30	0	3193	6500	400	160	0	Full step 2ph
7	Sporlan SEI 50	0	6386	7500	400	160	0	Full step 2ph
8	Sporlan SEH 100	0	6386	7500	400	160	0	Full step 2ph
9	Sporlan SEHI 175 Sporlan SEHI 400	0	6386	6500	400	160	0	Full step 2ph
10	Sporlan SDR-3	0	3193	3512	200	160	0	Full step 2ph
11	Sporlan SDR-4	0	6386	7025	200	160	0	Full step 2ph
12	Sporlan ESX unipolar	24	224	300	40	260	0	Full step 2ph
13	Sporlan EDEV B unipolar Sporlan EDEV C unipolar	0	800	1250	200	120	0	Half step
20	Castel 261	0	415	515	35	200	0	Full step 2ph
21	Castel 262 Castel 263	0	195	255	25	200	50	Full step 2ph
22	Castel 264	0	985	1135	70	560	50	Full step 2ph
30	Alco EXM unipolar Alco EXL unipolar	16	250	350	45	130	0	Half step
31	Alco EX4 Alco EX5 Alco EX6	0	750	1000	500	500	100	Full step 2ph
32	Alco EX7	0	1600	2000	500	750	250	Full step 2ph
33	Alco EX8	0	2600	3250	500	800	500	Full step 2ph
40	Danfoss ETS 12C Danfoss ETS 24C Danfoss ETS 25C Danfoss ETS 50C Danfoss ETS 100C	30	600	628	240	800	160	Full step 2ph
41	Danfoss ETS 12.5 Danfoss ETS 25 Danfoss ETS 50	0	2625	3150	300	100	75	Full step 2ph
42	Danfoss ETS 100	0	3530	4250	300	100	75	Full step 2ph
43	Danfoss ETS 250 Danfoss ETS 400	0	3810	4550	300	100	75	Full step 2ph
44	Danfoss ETS 6 unipolar	0	240	260	25	260	0	Half step
50	Sanhua VPF 12.5 Sanhua VPF 25 Sanhua VPF 50	0	2600	3000	300	140	0	Full step 2ph
51	Sanhua VPF 100	0	3500	4400	300	140	0	Full step 2ph
52	Sanhua VPF 150 Sanhua VPF 250 Sanhua VPF 400	0	3800	4400	300	140	0	Full step 2ph
55	Carel ExV	50	480	500	50	450	100	Full step 2ph

The driving mode can be selected through parameter Driving mode selection (Pi01). If value 0 is selected (Pi01=0) the driving mode is automatically calculated to ensure the maximum speed according to the step rate of the selected valve. It means if the nominal step rate of the valve is higher than 625 steps/s, 8 microsteps/s will be used; while if the nominal step rate is lower than 625 steps/s, 16 microsteps/s will be used.
It is recommended to use the driving type according to the valve features.
The Valve duty cycle (parameter Pr45) represent the limit of continuous operating of the valve: limiting the continuous activity of the valve reduces the heating of same.
For example: setting Pr45 = 70% means for every 70 ms in which operational current is used, there will be 30 ms in which maintenance current will be applied on the valve.
If the parameter is set to 100%, this algorithm is deactivated.
Furthermore, this procedure applies only to the normal operation of the valve: all forced movements (for example synchronisation closure, positioning caused by probe errors or communication errors) are continuous until the target position is reached.

9.16.4 Operation

During the re-synchronization phase (**Synchro wait** (1)) the valve is completely closed. When the instrument is switched on, to ensure complete closure, the valve is closed by *Overdrive steps* steps. Instead, during normal operation, to ensure complete closure, the valve is closed at 0 steps and then is closed another 10%**Maximum regulation steps* steps.
The valve is automatically resynchronized at every switch-on.
During normal operation of the valve, it assumes the 0% position corresponds to the physical position defined by Minimum regulation steps, and that the 100% position corresponds to the physical position defined by Maximum regulation steps.
A resynchronization request can be signalled using various methods:

- rising edge on digital input DI2 (if DI2 is configured as “resynchronization command” and Enabling mode (parameter Pr06) is configured as “standalone”
- rising edge on Resynchro request (ResR) if Enabling mode (parameter Pr06) is configured as “network”
- internal request from the algorithm
- upon reaching the maximum limit of operational hours (Working hours, parameter Pr40), Resynchronization interval (parameter Pr41), if configured.

A resynchronization request is performed only when it is safe to do, so when the state is Stand-by: this means that a resynchronization request made when the valve is enabled is performed automatically only when it is disabled.
It is not currently possible to cancel a request.
The valve moves with a maximum velocity defined by the Stepping rate parameter.
The positioning speed depends on the operation mode:

- during resynchronization is used the maximum speed, but towards the end of the positioning is made a deceleration ramp
- in debug mode is used the speed of the Debug step rate (parameter Prd0)
- in manual mode and for all other positioning is used the maximum speed.

Using Limit valve opening (parameter Pr30) it is possible to adapt the valve to the application.
For example, for a valve with a maximum rating of 10 kW fitted to a machine with 7.5 kW, Pr30 would be set to 75%.
So, if the request position target is 90%, the final real position of the valve may be 67.5% = 90 x 75% of the Maximum regulation steps.
The displayable variables for the current position and set-point in % are all referenced to the actual range of use of the valve (0 - Pr30%), while the position in steps is the real position.
If an invalid selection (Max steps = 0) is performed a Configuration error 23 is displayed.

9.16.5 Operating mode

9.16.5.1 Preliminary information

EVDRIVE04 implements a stepper motor control according to the state machine presented in the table here below (hereinafter the document will make reference to these status).
The state in which the algorithm is in may be readable in the FSM status (Finite State Machine, parameter Stat).

FSM	Meaning	
0	initialization	- Valve parameters acquisition - Request valve synchronization
1	synchronization wait	- Awaiting completion of synchronization - Request positioning to 0%
2	positioning wait	- Awaiting end of positioning - Positioning to Pr20
3	probe alarm	- Awaiting resolution of probe alarm - Positioning to Pr05
4	grid alarm	- Awaiting resolution of power supply alarm - Safe shutdown requested if backup battery is operative
5	communication alarm	- Awaiting positioning to communication alarm - Positioning to Pr48
10	stand-by off	- Evaluating resynchronization request flag - Acquisition of relevant parameters - Verifying consistency of parameters
11	stand-by on	- Evaluating Pr01 parameter to start the right valve control
30	analog positioner	- Analog positioner control in according to Pr01 selection
40	stabilization	- Positioning at stabilization position - Wait stabilization delay
41	start-up	- Positioning at start-up position - Wait start-up delay
42	algorithm selection	- Control algorithm selection - Set PID initializing request
50	manual	- Valve controlled in manual mode
51	debugger	- Debugging function active
61	SH or HGB algorithm	- Valve parameters acquisition - Request valve synchronization

9.16.6 Stand-by and operation mode selection

At the end of the resynchronization operations the machine will enter the stand-by state, during which the installer parameters are loaded and configurations are checked.
In this status can be modified the installer parameters, that take effect immediatly, and also the manufacturer parameters, that require a reset.
If there are no configuration errors, represented in the Alarm status (parameter AlSt) and Configuration warning (parameter CoWa), the valve can be enabled.
The operation mode is set using Main control type (Pr01), and when the valve is enabled:

if PR01 = 0	the system remains held in the Stand-by on (11)
if PR01 = 6 or 8	start SH or HGB algorithm or manual mode, according to functioning mode (Pr02)
else	analog positioner (30) operation mode begins

Please note regardless of the state of the enabled valve, disabling it will cause a positioning procedure using the value specified in stand-by position (parameter Pr20), after which the state is changed to Stand-by off (10).

9.16.7 Enabling EVDRIVE04

Excluding the automatic movements, it is necessary to enable the valve module EVDRIVE04 before moving it.
Enabling mode (parameter Pr06) configures the enabled features to be accepted.
When the valve module is to be used in standalone mode, an enable from digital input mode must be chosen (parameter Pr06 = 0 or Pr06 =1).
The selection must be made based on the type of input to be used.
A typical application of the DIHV (parameter Pr06 = 1) mode is to connect it in parallel to the compressor, such that the valve is enabled along with it.
To enable the valve using digital inputs, it is necessary for these to be configured correctly, otherwise a configuration alarm will be generated.
In particular:

If Pr06 = 0:	the DI1 or D12 input must be configured as enable	> Ph11 = 1 or Ph21 = 1
If Pr06 = 1:	the DIHV input must be configured as enable	> Ph31 = 1

Selecting the values from 2 to 9 the valve can be enabled via serial port using MODBUS or CAN communication protocols: this selection must be made if a controller manages the EVDRIVE04.
Selecting values from 6 to 9, it is possible to operate the EVDRIVE04 in standalone mode if a communications fault occurs, in this case the DI1 or DI2 inputs must be configured as enable (parameter Ph11 = 1 or Ph21 = 1).
The enabling of the valve using a communication network requires system which ensures the EVDRIVE04 can determine whether the controller is still online: specifically, the module expects the controller updates the variable Enable valve command (parameter EnaV) periodically. See the paragraph “Communication error”
The Enable valve command (parameter EnaV) has different addresses according to the communication system chosen:

- CAN (Pr06 = 2 or Pr06 = 6)
- MODBUS RS-485 (Pr06 = 4 or Pr06 = 8): EnaV address = 1281

9.16.8 Analog inputs

The configuration of each analog inputs is achieved by setting the related parameter: *Aix probe type* (Pia*x*) determines the kind of probe connected to the analog input and *Aix probe usage* (Piu*x*) determines the use of the analog input, where "*x*" is the input number.

The analog inputs AI3 and AI4 are dedicated to the measurement of the suction temperature Ts and evaporator pressure Pe. The inputs AI1 and AI2 can be used as backup probe, or left free.

During the **Stand-by off** (10) is performed the verify to correctness and consistency of these parameters: a

configuration error will prevent exiting this state. In this case an alarm is generated (bit 1 of *Alarm status* (AlSt)), and an error code in *Configuration warning* (CoWa) is readable.
The input type is set using parameter *Aix probe type* (Pia*x*). The analog inputs must be configured according to the probe connected:

- AI1 and AI3 may be configured as NTC, Pt1000 or 0/4÷20 mA.
- AI2 may be configured as NTC, Pt1000, 0/4÷20 mA or ratiometric 0÷5V.
- AI4 may be configured as 0/4÷20 mA, 0÷10V or ratiometric 0÷5V.

Therefore, the temperature probe measuring the suction temperature (Ts), necessary for calculating the Superheat, must be connected to one of the three analog inputs AI1, AI2 or AI3, while the pressure probe for measuring the evaporation pressure may be connected to any of the four analog inputs. If the analog input is used for measuring pressure, this parameter also defines the conversion range.
The *Aix probe usage* (Piu*x*) parameter defines the use of the analog input: primary or backup probe for measuring temperature or pressure.

For example:
if Pia4 = 11 the input will be configured as 4÷20 mA the pressure reading will be transformed into 0.5÷8 Barg

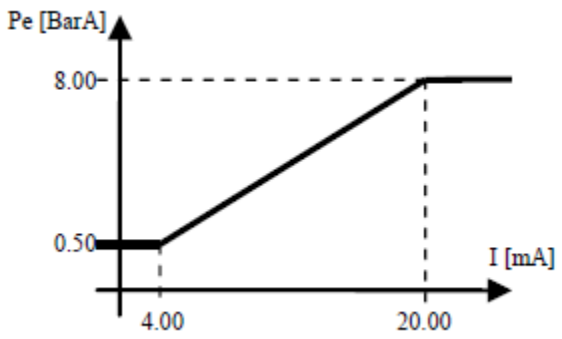

Each of the analog inputs may be configured as “scaling” (Piax = 30), this means its settings will be determined by parameters:
PxXty: type of input (0÷20 mA, 4÷20 mA for AI1, AI2 and AI3, 0÷20mA, 4÷20 mA, 0÷5V or 0÷10V for AI4)
PxYty: type of output (BarA or Barg)
PxXM: maximum input value (e.g. 15 mA, 20 mA, 5V, 10V, …)
PxXm: minimum input value (e.g. 0 mA, …, 10mA, 0V, 3V, …)
PxYM: maximum output conversion value
PxXm: minimum output conversion value

PxYM and PxXm parameters are expressed in the units of the chosen measurement. E.g., if the input is configured as a pressure probe and the measurement unit is in Bar, these parameters should contain the minimum and maximum values hundredths of BarA or Barg according to PxYty.

In this example, the following values have been applied to the AI4 probe:
PH60 = 0 (pressure measurement unit = Bar)
P4Xty = 1 (0÷20 mA)
PxYty = 1 (BarA)
P4XM = 2000 (expressed in hundredths)
P4Xm = 400 (expressed in hundredths)
P4YM = 2500 (expressed in hundredths)
P4Ym = 1000 (expressed in hundredths)

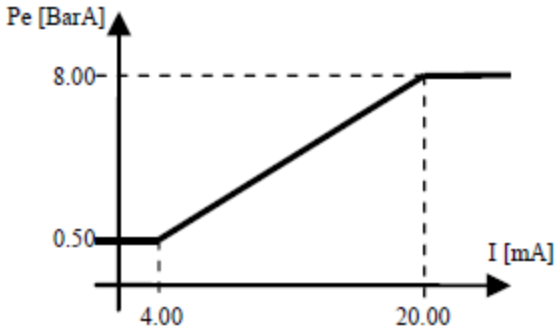

9.16.9 Analog positioner control

The analog positioner mode permit to move the valve position linearly respect to the value applied to the active analog input.
To enter analog positioner mode, from the **Stand-by off** (10), set the *Main control type* (parameter Pr01) to the desired and enable the valve; if all the configuration is correct enter in **Stand-by on** (11), and then in the **Analog positioner** (30). To exit the analog positioner mode, it is necessary to disable the valve, which will cause a positioning movement to the value specified in *Stand-by position* (parameter Pr20), before entering the **Stand-by off** (10).

Pr01 = 01 -> analog positioner on AI1 (0÷20mA)
Pr01 = 02 -> analog positioner on AI2 (0÷5V)
Pr01 = 03 -> analog positioner on AI3 (4÷20mA)
Pr01 = 04 -> analog positioner on AI4 (0÷10V)
Pr01 = 05 -> analog positioner on AI4 (using parameter Pia4 to select probe type)
Pr01 = 07 -> analog positioner on AI3 (4÷20 mA) and AI4 (0÷10V): the positioning is calculated using the maximum of the two. Resincronization request is performed only if the resulting positioning is <=1

The unused analog input are configured according to their respective Ai probe usage (parameter Pia).

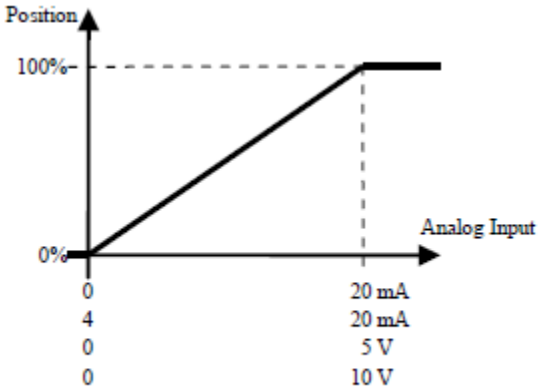

9.16.10 Algorithm start-up

To enter algorithm mode, from the **Stand-by off** (10), set the *Main control type parameter* Pr01 = 6 to perform Superheat (SH) control or Pr01 = 8 to perform hot gas bypass control. If all the configuration is correct enter in **Stand-by on** (11) and then in the **Stabilization** (40), in which is performed a positioning to Stabilization position

(parameter Pr09) and await Stabilization delay (parameter Pr08).
Then enter in **Start-up** (41), in which is performed a positioning to Start-up position (parameters Pc21 or Pp21) and await Start-up delay (parameters Pc20 or Pp20).
Finally enter in the Algorithm selection (42) in which evaluates Main control type (parameter Pr01) and Functioning mode (parameter Pr02).

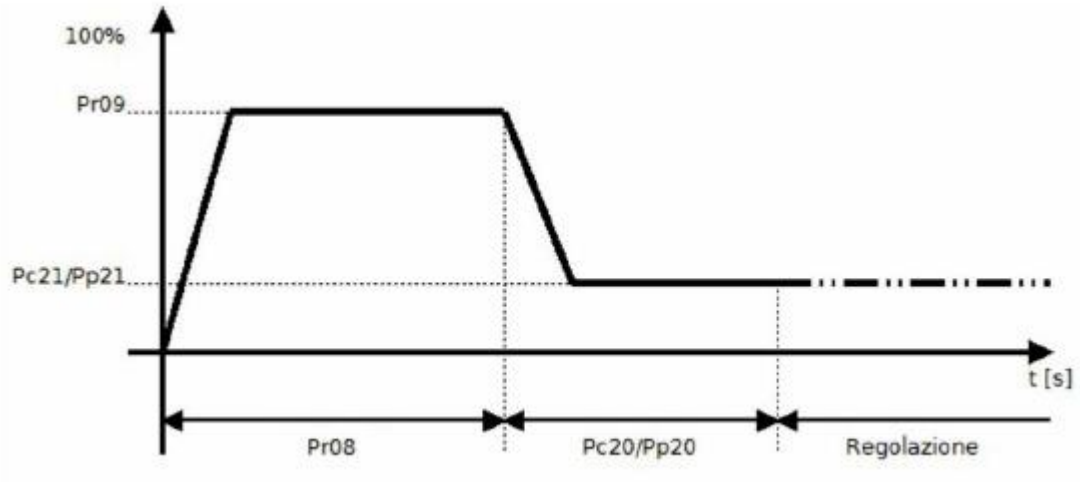

This state also enables manual mode, debugger mode, or one of the available SH-algorithm.

The *Functioning mode* (Pr02) defines the algorithm's operation mode, while *Main control type* (Pr01) defines which algorithm can be used.
Specifically:

· Pr02 = 0: enables control SH-algorithm defined by *Main control type* (Pr01)
· Pr02 = 1: enables manual algorithm, which permits movement of the valve to the position specified by *Manual set-point position* (Pr03)
· Pr02 = 2: actives a specific algorithm that moves the valve linearly up and down, at the desired step rate, between two specified positions

Loading of *Functioning mode* (Pr02) occurs every main cycle, and thus switching between the three algorithm operation modes occurs without forced intermediate positioning moves.
Note that Functioning mode (parameter Pr02) and Manual set-point position (parameter Pr03) are not saved into memory, this means that from reset the valve starts always in automatic mode with Functioning mode Pr02 = 0 and Manual set-point position Pr03 = 0.

9.16.11 Manual mode

In manual mode (parameter Pr02 = 1), this permits movement of the valve and bringing it to the percentage value stored in Manual set-point position (parameter Pr03) using the maximum step rate.

9.16.12 Debugging mode

The debugger feature is enabled when Pr02 = 2: the valve will move from a Debug minimum position (parameter Prd1) to a Debug maximum position (parameter Prd2) with the step rate defined by Debug step rate (parameter Prd0). Internally, the actuated step rate value is clamped to the maximum step rate of the selected valve.

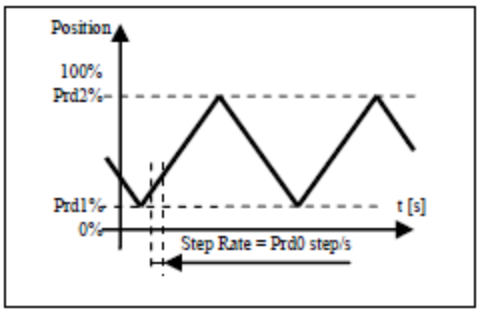

9.16.13 Control algorithm

Setting the *Main control type* (parameter Pr01) selects the algorithm to enable:
- Pr01 = 6: Superheat (SH) control algorithm
- Pr01 = 8: Hot gas bypass control algorithm

9.16.14 Superheat control algorithm

The purpose of this control is to maintain the Superheat (SH) at its set-point value, in order to maximise the efficiency of the system and ensure that the compressor is protected by entrance of liquid.
The SH is usually controlled by a PID.

After selecting the control algorithm, it is necessary to set the various regulation parameters:

· *SH set-point* (Pc01, Pp01)
· *LoSH set-point* (Pc02, Pp02)
· *HiSH set-point* (Pc03, Pp03)
· *LOP temperature* (Pc04, Pp04)
· *MOP temperature* (Pc05, Pp05)
· PID proportional band (Pc13, Pp13)
· PID integral time (Pc14, Pp14)
· PID derivative time (Pc15, Pp15)
· Start-up delay (Pc20, Pp20)
· Start-up position (Pc21, Pp21)
· Fast action (Pr12)
· Neutral zone high threshold (Pr10)
· Smart band zone threshold (Pr11)
· SH filter time constant (Pr14)
· Fast action threshold (Pr13)

SH parameters set selection (SetP) supports selection of one of two different sets of regulation parameters. Each set includes SH set-point, PID parameters, and LoSH, HiSH, MOP and LOP alarm set points, start up position and delay. Example uses are: using set1 parameters for a chiller, set2 for a heat pump.

SH parameters set selection (SetP) supports switching from one control parameter set to another simply and quickly. It is possible to change the regulation parameter sets directly by modifying *SH parameters set selection* (Pr04), if a serial interface is present, or via correctly configured digital inputs on the standalone version. If one of the digital inputs (DI1 or DI2 or DIHV) is configured as "Change SetP" (*DI1 function* (Ph11) or *DI2 function* (Ph21) or *DIHV function* (Ph31) setting to 2), the parameter sets for the PID control are determined by the digital input status: set 1 is

selected if the input is low, set 2 is selected if the input is high. If no DI is configured for parameter set modification, the data is taken directly from *SH parameters set selection* (Pr04).

With the operation mode selected, the regulator uses the related SH set-point parameter. This is a fundamental parameter for the proper functioning of the control algorithm. A low set-point ensures a higher evaporator performance, lower temperatures, and minimum variations, but has the disadvantage that liquid may reach the compressor.

The algorithm uses different regulation parameters, depending on the working area:

- if the measured error is lower than 0 an aggressive normal control is performed.
- else if the measured error is in the dead band (error lower than Dead band threshold (parameter Pr10)) there is no changing in valve opening.
- else if the measured error is in the smart band (error lower than Smart band threshold (parameter Pr11)) a smart algorithm is used.
- else a normal PID control is performed

If the measured error is lower than *Fast action threshold* (parameter Pr13) at the above operation the "Fast Action" algorithm is added which further strengthens the algorithm response

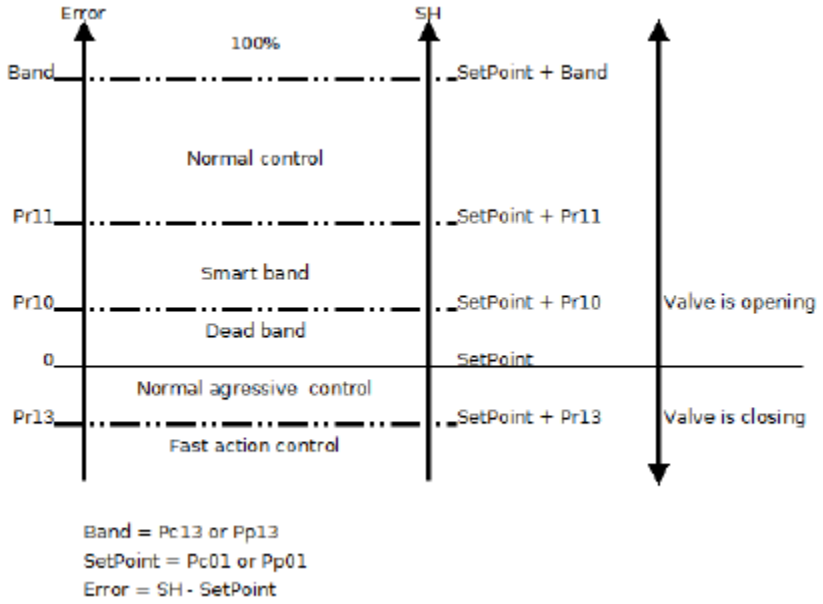

All the input parameters, with the exception of the *Main control type* (Pr01), are acquired at every main cycle.

9.16.15 Hot gas bypass algorithm

The purpose of this control is to maintain the temperature at its set-point value.
After selecting the control algorithm, it is necessary to set the various regulation parameters:

_ Temperature set-point (Pc06, Pp06)
_ PID proportional band (Pc13, Pp13)
_ PID integral time (Pc14, Pp14)
_ PID derivative time (Pc15, Pp15)

_ Start-up delay (Pc20, Pp20)
_ Start-up position (Pc21, Pp21)
_ Neutral zone high threshold (Pr10)
_ Smart band zone threshold (Pr11)

SH parameters set selection (Pr04) work in the same way as in SH control algorithm.
The algorithm use different regulation parameters, depending on the working area:

If the measured error is in the *Dead band* no regulation is performed
If the measured error is in the *Smart band threshold* a smart algorithm is used.
Out of this bands the normal algorithm is performed

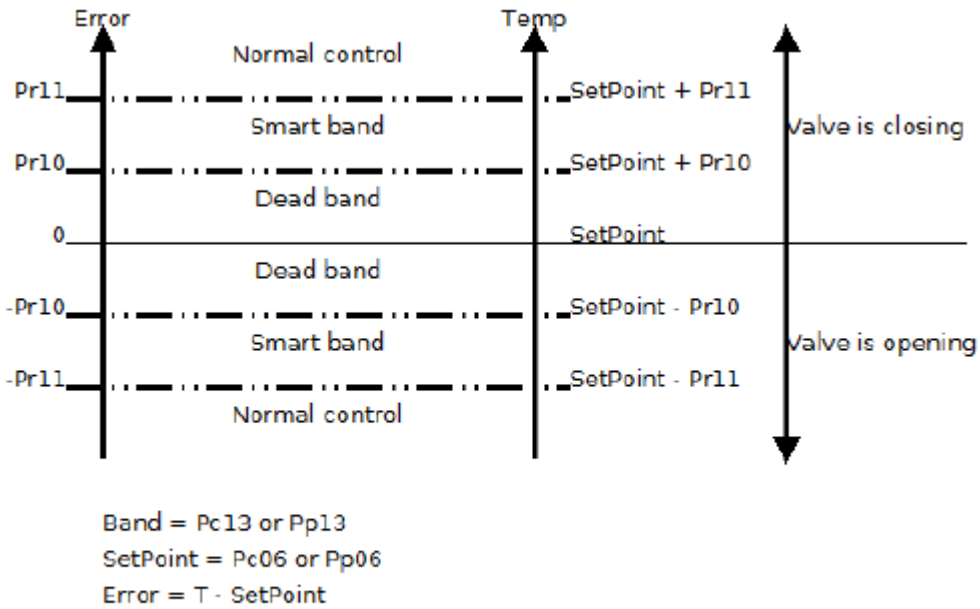

9.16.16 Alarm relay

The alarm relay is managed directly by the application. It is possible to set the *Relay function* (parameter Ph01) and *Relay logic* (parameter Ph02).
The alarm relay can be operate if there is an alarm situation depending of the choose (Ph01 = 1÷5): any alarm, only probe alarm, only LoSH alarm, only for MOP alarm, only for valve alarm.
If Ph01 = 6, the relay is used to control a solenoid valve which intervenes to block the flow of refrigerant in case of a power failure, or a disabled valve. The behavior is as follows: the relay remains in the excited state (solenoid valve open) while the valve is enabled, and is unexcited (solenoid valve closed) if the valve is disabled, or a power failure is detected.
The Ph01 = 7 combine the configuration 1 and 6.
If Ph01 = 8, the relay will be activated if the resynchronization is requested. To perform a resynchronization operation, the valve must be disabled.

If Ph01 = 0, the relay is not used by internal application and may be operated by a controller.
The relay remains in the OFF state, as defined by the value in parameter *Relay logic* (parameter Ph02), until it is changed by the condition defined in parameter *Relay function* (parameter Ph01). E.g: if Ph02 = 0 (normally not excited), and Ph01 = 1, the relay will be excited when any alarm is set.

9.17 CONFIGURATION

9.17.1 Unit of measurements

Units of measurement used in the internal algorithm are Celsius (oC) and Kelvin (K) degrees in tenths for temperatures, and barG in hundreds for pressure.
For the convenience of the user, it is possible to set temperature and pressure parameters in the preferred unit of measurement, specifying the unit in parameters Pressure unit of measurement (parameter Ph60) and Temperature unit of measurement (parameter Ph61).
These parameters are acquired only during **Initialization** (0) phase at the reset , thus any changes to these parameters will take effect only after a reset.
Setting of the Ph60 and Ph61 parameters affects:

- the limits of certain parameters
- the measurement read from state variables
- the temperature and pressure parameters

The modify of the parameters of measurement unit will trigger automatic conversion of existing temperature and pressure parameters: the automatic conversion of all the pressure and temperature parameters is performed in the Initialization (0) at the start-up, and then the board reset is needed after unit of measure parameters change.
The correct procedure should be performed in this order:

- disable the valve
- change parameters Ph60 and/or Ph61
- reset the board
- check Parameters alarm bit in the Alarm status (AlSt)
    - if parameters alarm is active, check and correct all the parameters of temperature and pressure, cancel the alarm leading to 1 bit 0 of the variable Command (Cmd), and then reset the EVDRIVE04
    - if parameters alarm is cleared check ParS variable and if necessary, reset the board again.

It is recommended not to abuse the automatic conversion of the parameters: is a delicate function as its disruption can lead to the invalidation of all the memory parameters.
In addition, repetitive conversions lead to a subsequent loss of precision in the values.
The Internal unit of measure (parameter UdM) indicates which units of measurements are actually used, since the parameters Ph60 and Ph61 may have been changed. After the reset and the automatic conversion the Internal unit of measure (parameter UdM) mirrors the parameters.

Given that, as stated earlier, the internal algorithm work in Kelvin, Celsius and BarA, if the units of measurement chosen match these, no conversions are performed. If the user's units of measurements are in Fahrenheit and / or Psi, the following conversions are applied:
Param. in °F/R/Psi → val. in °C/K/Bar → algorithm → val. out °C/K/Bar → var. out °F/R/Psi

9.17.2 Configuring a built-in version

To modify a parameter operate as follows:

1. Press and release button UP or button DOWN to select a submenu.
2. Press and release button ENTER.
3. Press and release button UP or button DOWN to select the parameter.
4. Press and release button ENTER.
5. Press and release button UP or button DOWN to modify the value.
6. Press and release button ENTER to confirm the value.
7. Press and release button ESC over and over again to go back to the previous pages.

9.17.3 User menu

Make sure the power supply is switched on.
Move among the pages using the buttons as shown in the example here below, using the buttons or to scroll through the menu pages:

Page User.1

```
Status
Set      0.0  K
SH       0.0  K
Ts       0.0  °C
Te       0.0  °C
Pe     0.00Bar
Valve position  0.00%
<<    No Alarm>     >>
```

△ or ▽ to select

```
Status
Set      0.0  K
SH       0.0  K
Ts       0.0  °C
Te       0.0  °C
Pe     0.00Bar
Valve position  0.00%
<<    No Alarm>     >>
```

and ↵ to enter ALARM STATUS page:

Page User.1.a

```
ALARM STATUS
Config          ok 0
AI 1            ok
AI 2            ok
AI 3            ok
AI 4            ok
Communication   ok
E2              ok
```

```
ALARM STATUS
Parameters      ok -
Power supply    ok
Battery         ok
Data acquired
Algo running
Algo active
LowPressure     ok
```

```
ALARM STATUS
LOP             ok
MOP             ok
LoSH            ok
HiSH            ok
```

△ or ▽ to scroll the page ESC to return to Page 1

Page User.2

```
Status
Valve Disabled
Initialization state
Algo mode active
Resynchro request
Disable request
Working time        0h
<<                  >>
```

Page User.3

```
Status
Current valve pos.:
  0.00% [     0stp]
Set-point pos.  0.00%
Step rate       0stp/s
Driving mode full 2 ph
<<                  >>
```

Page User.4

```
Status
AI 1            0.0
AI 2            0.0
AI 3            0.0
AI 4            0.0
DI 1 OFF    DIhv  OFF
DI 2 OFF    Relay OFF
<<                  >>
```

Page User.5

```
User configuration
        Set algo mode
Manual: set-p pos   0%
Debug:
   step rate   25stp/s
   min          0%
<< max        100%  >>
```

Page User.6

```
User configuration
PID param.set: used  0
               set   1
Common parameters   >
Set1 parameters     >
Set2 parameters     >
<<                  >>
```

△ or ▽ to select

```
User configuration
PID param.set: used  0
               set   1
Common parameters   >
Set1 parameters     >
Set2 parameters     >
<<                  >>
```

and ↵ to enter Set1 or Set 2 parameters page:

Page User.6.a

```
Set1 parameters >>
SH setpoint      6.0<
PID proport.    40.0<
PID integral     120s
PID derivative    30s
Start-up delay    30s
Start-up pos. 50.00%
Gas bypass sp   10.0°C
```

```
Set1 param. settings
Alarm set-point
LoSH             3.0<
HiSH            15.0<
LOP            -40.0°C
MOP             40.0°C
<<
```

Page User.6.b

```
Set2 parameters >>
SH setpoint      6.0K
PID proport.    40.0K
PID integral     120s
PID derivative    30s
Start-up delay    30s
Start-up pos. 50.00%
Gas bypass sp   10.0
```

```
Set2 param. settings
Alarm set-point
LoSH             3.0<
HiSH            15.0K
LOP            -40.0°C
MOP             40.0
<<
```

◁ or ▷ to scroll through the user menu Set1/2 parameters pages

The first pages are dedicated to the end user and permit display of major features of the EVDRIVE04, any alarm messages, or whether it is necessary to resynchronise or reset the machine after changing parameters. In the PageUser2 , the fourth line is visible and blinking only if there is a request for resynchronization; the last line signalizes a request to disable (blinking "disable request") or a request to reset the board (negative blinking "reset request").
In the "User configuration" pages, some manual and debug mode functions are also available, including the direct setting of SH set-point to pass to the algorithm.

In the "Alarm Status" page all the warnings and alarms are displayed.

9.17.4 Installer menú

Enter the Installer menu pressing ◁ in Page User 1 or pressing ▷ in Page User.6
The default level 1 password is "10".

```
Installer menu
Main parameters   >
Alarm parameters  >
Simulation        >

Manufacturer menu >
<<
```

Page Installer.1

```
Main param. settings
Main control type
        SH control
Stabiliz. delay     5s
Days to resynchro    1
Backup battery absent
                    >>
```

```
Main param. settings
Valve position on
 -Stand by      0%
 -Stabiliz.   100%
 -Probe alarm   0%
 -Comm. error   0%
<<
```

Page Installer.1.a

```
Alarm param. settings
LoSH  enable OFF
      delay   30s
      hyst.  0.5K
HiSH  enable OFF
      delay   30s
      hyst.  1.0K   >>
```

```
Alarm param. settings
LOP   enable OFF
      delay   30s
      hyst.  1.0K
<<                  >>
```

```
Alarm param. settings
MOP   enable OFF
      hyst.   1.0
      delay    30s
      bypass   30s
      maxdSH  7.0
      band    8.0
<<    filter   1510s >>
```

```
Alarm param. settings
LowPressure
   enable       OFF
   set-point  4.00Bar
   delay       180s
   hyst.      0.50Bar
   bypass      180s
<<                  >>
```

```
Alarm param. settings
Communication
      enable OFF
      delay   30s
<<                  >>
```

```
Alarm param. settings
Power supply
      enable OFF
      delay    1s
Backup battery
      enable OFF
      delay   35s
<<
```

Page Installer.1.b

```
Simulation
enabOFF

DI 1OFF    DI 2OFF
DI 3OFF

AI 1O      AI 4O
AI 3O      AI 2O
```

Page Installer.1.c

These menus permit modification of most driver parameters.
In the "Main param. settings" the user can change the control type (analog positioner or SH algorithm), the algorithm sample time, the algorithm parameters set to be used and the parameters for each set, valve start-up position, valve position in case of probe or communication error, valve stand-by position, etc.
The "Alarm param. settings" permit to enable or disable each alarm and settings the parameters.

9.17.5 Manufacturer menú

Enter the Manufacturer menu selecting “Manufacturer Menu” using △ or ▽ and ↵ to enter;
The default level 2 password is “20”.

Page Manufacturer 0

```
To make operative
the manufacturer
parameters is
necessary to reset
the device
```

Page Manufacturer 1

```
Manufacturer menu
Plant & valve        >
Digital I/O          >
Analog input         >
Communication        >

Parameters backup    >
Parameters restore   >
```

Page Manufacturer 1.a

```
Plant&Valve settings
Refr.        R-12342E
Valve          Sp CO2
Limit        100.00%
Cycle           100%
Drv        Full 2ph
Generic valve        >
                    >>
```

```
Plant&Valve settings
Enable valve mode
          DI1 or DI2
Frequency grid   50 Hz
Unit of measurement
  temperature   °C/K
<< pressure       Bar
```

Page Manufacturer 1.a.1

```
Generic valve setting
Minimum stp   200 stp
Maximum stp  1596 stp
Overdrive s  1600 stp
Step rate     200 stp/s
Max current   120 mA
Hold current    0 mA
Select copy...
```

Page Manufacturer 1.c

```
Digital I/O settings
        funct.
Relay   Disabled     NO
DI1     enable       NO
DI2     change set   NO
DIHV    none         NO
Led p   Status
```

Page Manufacturer 1.d

```
Analog Input settings
Analog Input 1       >
Analog Input 2       >
Analog Input 3       >
Analog Input 4       >
Ts offset      0.0°C
Te offset      0.0°C
```

```
AI1 Settings
Usage:Not used
Type1: NTC
Scaling settings:
X axis:     |Y axis:
Type0-20mA  |relative p
min    0.00 |min    0.00
Max   20.00 |Max    1.00
```

```
AI2 Settings
Usage:Not used
Type1: NTC
Scaling settings:
X axis:     |Y axis:
Type0-20mA  |relative p
min    0.00 |min    0.00
Max   20.00 |Max    1.00
```

```
AI3 Settings
Usage:Ts primary
Type1: NTC
```

```
AI4 Settings
Usage:Pe primary
Type10:0.5÷8BarA 4÷20
Scaling settings:
X axis:     |Y axis:
Type0-20mA  |relative p
min    0.00 |min    0.00
Max   20.00 |Max    1.00
```

Page Manufacturer 1.e

```
Communication
CAN bus              >
Modbus on RS 485     >
```

```
CAN Bus settings

CAN node address      0
CAN baud rate       10K
CAN timeout           0
```

```
Modbus on RS 485

Address               1
Baud Rate          9600
Parity             even
Stop Bit         1 bit
```

```
Parameters backup
Application param.
key          memory
Drivers param.
key          memory

Status:OK
```

Page Manufacturer 1.f

```
Parameters restore
Application param.
key          memory
Drivers param.
key          memory
Status:OK
Load default param.
```

Page Manufacturer 1.f

The backup and restore functionalities are active only in **Stand-by off** (10). They are protected by the Level 5 password and permit to download a copy of the EVDRIVE04 application's parameters and/or the driver's parameters (communication settings, etc.) in the memory or in the parameters key.
The user can restore the parameters with the copy in the memory or in the parameters key.

9.17.6 Configuring a blind version

The following procedures show an example of configuration of a blind version through an user interface (in the example EPJgraph) and through its user interface.
For further information please consult the hardware manual of the user interface.

Operate as follows:

1. Switch off the power supply of the device and of the interface.
2. Connect the device to the interface through the CAN port; look at chapter 4 “ELECTRICAL CONNECTION”.
3. Switch on the power supply of the device and of the interface.
4. Keep pressed 2 s buttons OK and LEFT.
5. When the display of the interface will show the following menu release buttons OK and LEFT.

EPJgraph

Parameters

Contrast

CAN Network

Modbus

Info

Real date and time

6. Press and release button UP or button DOWN to select "**CAN Network**".
7. Press and release button ENTER.
8. Press and release button ENTER again to set the password value.
9. Press and release button DOWN over and over again to set "**-19**".
10. Press and release button ENTER again.
11. Set parameter *NW Node* using button UP or button DOWN to select the parameter and using button ENTER to modify and to confirm the value.

    According to the factory setting the address of the CAN node of an electronic expansion valve driver has value *11* (therefore operate on the interface to set parameter *NW Node* to *[1] 11*).

12. Switch off the power supply of the interface.
13. Switch on the power supply of the interface.

9.17.7 Main menu

The following procedures show how to gain access to the main menu.
The main menu provides information on the project, on the status of the inputs, allows to set the level's passwords, etc.

To gain access to the procedure operate as follows:
1. Make sure the power supply is switched on
2. If you are using a built-in version, keep pressed 2 s buttons UP and DOWN: the display will show the menu. If you are using a blind version through a remote user interface (by exemple EPJgraph), keep pressed 2 s buttons ESC and RIGHT: the display will show the internal menu.

   The access to some submenus is protected by password.

To gain access to a not protected submenu operate as follows:
3. Press and release button UP or button DOWN to select the submenu.
4. Press and release button ENTER.

To gain access a protected submenu operate as follows:
5. From step 2, press and release button UP or button DOWN to select the submenu.
6. Press and release button ENTER.
7. Press and release button ENTER again to set the password value.
8. Press and release button DOWN over and over again to set "**-19**".
9. Press and release button ENTER again.

To modify a parameter operate as follows:
10. From step 4 or step 9, press and release button UP or button DOWN to select the parameter.
11. Press and release button ENTER.
12. Press and release button UP or button DOWN to modify the value.
13. Press and release button ENTER to confirm the value.
14. Press and release button ESC over and over again to go back to the previous pages.

To quit the procedure operate as follows:
16. Press and release button ESC over and over again: possible modifications will not be saved.

```
EVDrive04
  Info
Parameters
Networks
Password
Diagnostic
  Debug
ModBus Debug
```

Version information page

```
Info
FW     1115    AA      1
HW        1     0      0
Micr     ST  Test     NO
SN        0
 --/--/---- --:--:--
```

Common parameters and Advenced parameters pages

```
Parameters (1)
AI 1                NTC
AI 2            4-20mA
AI 3                NTC
AI 4            4-20mA
AI Err Time           5
Advanced Par          >
```

```
Parameters (2)
I/O Timeout           0
En. Prg Level        NO
Psw Indip.           NO
Backlight           OFF
B. Time               0
Contrast              0
Date Char Sep
```

```
Parameters (2)
Year Format          YY
Date Format     D-M-Y
Time Char Sep
Time With Sec        NO
Time AM/PM           NO
CSV Char Sep
```

```
Parameters Advanced
AI 1 filter     OFF 0
AI 2 filter     OFF 0
AI 3 filter     OFF 0
AI 4 filter     OFF 0
DI filter       OFF 0
Measure filter      0
```

Networks pages

```
Networks
  CAN Bus
  UART 1
    USB
```

CAN network configuration and status pages

```
CAN Bus
MyNode    0 Master  NO
Baud    10K Timeout  0
NetworkNode[  0]  0>
```

```
CAN Bus Bit Timing
  TSEG1        0
  TSEG2        0
  BTR          0
  SJW          0
                <>
```

```
DEBUG CAN
Status          INIT
Bus Status        Ok
Cnt Rx             0
Cnt Tx             0
Cnt Ovf            0
Cnt Passive        0
Cnt Bus Off        0
```

Modbus on RS485 configuration page

```
UART1: ModBus Slave
Address            0
Baud Rate       1200
Parity          NONE
Stop           1 BIT
```

USB status page

```
USB
USB Status
          Init Device
Device Status
                Idle
Speed
```

Password setting page

```
        Password
Level 1:     10    OFF
Level 2:     20    OFF
Level 3:     30    OFF
Level 4:     40    OFF
Level 5:     50    OFF
Timeout:           240
```

Diagnostic page

```
        Diagnostic
Memory              ok
Stack               ok
5V Ratio            ok
12V Measure         ok
Math                ok
Key Par             ok
```

Internal status

```
          Debug
Main time        19 ms
...max time      27 ms
...free stack  9600 3
5V probe        0.0 J
12V probe       0.0 J
```

RS485 status

```
        ModBus 1
Comm.    State    Disab
 0    1200 none  1 bit
```

9.17.8 Connecting the device through the set-up software system Parameters Manager

The following procedure shows how to connect the device to the set-up software system Parameters Manager.
For further information please consult the application manual of Parameters Manager.

Operate as follows:

1. To connect the device to the set-up software system Parameters Manager through the USB port, make sure to have an USB cable; to connect the device to the set-up software system Parameters Manager through the RS-485 port, make sure to have the non optoisolated RS-485/USB serial interface EVIF20SUXI.
2. Switch off the power supply of the device.
3. Connect the kit (or the interface) to the Personal Computer.

4. Switch on the power supply of the device.
5. Operate as related in the User manual of Parameters Manager.

9.17.9 Backup and restore

If the EVDRIVE04 driver version is displayed (using the built-in display or another display connected via the CAN port) you can view the backup / restore pages which permit to save a copy of the memory areas of the parameters. The copy can be done in another area of the memory or in an external memory (parameters key) connected to the communication programming port.
It is possible to save both the application parameters (EVDRIVE04 parameters) and the driver parameters (calibration network settings, ...).
It is possible to restore the parameters from copies in the memory (restore application or driver parameters) or load the default parameters (load default configuration from flash memory).
The backup and restore functionalities are active only in Stand-by off (10).

9.17.10 Configuring the device through an USB flash drive

The following procedures show how to make the upload and the download of the configuration parameters through an USB flash drive.

To copy the parameters from the device to the USB flash drive operate as follows:

1. Make sure the power supply is switched on.
2. Connect the flash drive to the device.
3. With reference to step 28 of the paragraph 7.2 "Configuring a built-in version", from page 37 press button UP or button DOWN to select “**key**” to copy the parameters in the flash drive or “**memory**” to copy the parameters in the internal memory of the device, belonging to the field “**Application param.**” to copy the application software parameters or belonging to the field “**Drivers param**”. to copy the configuration parameters.
4. Press and release button ENTER: the parameters will be copied (this operation usually takes a few seconds; the last line of the page provides information on the status of the process).
5. Disconnect the flash drive.

   To copy the parameters from the USB flash drive to the device operate as follows:

6. Make sure the power supply is switched on.
7. Connect the flash drive to the device.
8. With reference to step 28 of the paragraph 7.2 "Configuring a built-in version", from page 38 press button UP or button DOWN to select “**key**” to copy the parameters from the flash drive or “**memory**” to copy the

parameters from the internal memory of the device, belonging to the field "**Application param.**" to copy the application software parameters or belonging to the field "**Drivers param**". to copy the configuration parameters.

9. Press and release button ENTER: the parameters will be copied (this operation usually takes a few seconds; the last line of the page provides information on the status of the process).
10. Disconnect the programming flash drive.
    The copy of the parameters from the flash drive to the device is allowed on condition that the firmware of the devices coincides.

To quit the procedure operate as follows:

11. Press and release button ESC over and over again: possible modifications will not be saved.

9.18 REPROGRAMMING

It is possible to reprogram the device using a USB flash drive in which the work.ucjb and work.ucje files have been copied. Once the USB flash drive is inserted, the files are copied in the device, which restarts: if the downloaded program is suitable, the device is reprogrammed with the new version.
You can reprogram the Device using the Download Manager program, connecting the PC to the device using the USB port.

9.19 SERIAL COMMUNICATION

9.19.1 Preliminary information

It is possible to control the EVDRIVE04 driver by connecting it to a controller.
The controller sends information to the driver necessary for its correct functioning, and the driver responds with its internal states, such as (for example) the pressure and temperature measurements, alarms, certain parameters, etc.
The connection methods available on the EVDRIVE04 are CANBUS, MODBUS RS-485 and MODBUS USB, according to the model.
The protocol to be used for communication with the controller must be selected via parameter Enabling mode (Pr06). See the "Enable EVDRIVE04" section.

The EVDRIVE04 behaves as an expansion to read the analog inputs AI1 and AI2, read digital inputs and write the relay. (Note that driving the relay by the controller completely bypasses its function set by parameter.)

9.19.2 CANBUS serial communication

The EVCO controllers primarily use a protocol based on CANbus for communication with controllable systems.

9.19.2.1 CAN Master tool

The exchange of data is based on a list of variables or parameters that the controller may send to the driver, and a list of variables the driver sends to the controller to provide its state data, using the CAN Master tool.

The variables and parameters to be monitored should be selected from lists proposed by SW development according to

their own needs.
The protocol performs one send request every second and one receive request every second, which does not occur simultaneously. Each send/receive request is done on a different node, thru the nodes on the network.
You can give a different timing of the individual entities. The levels selected are:

- Level INIT: the value is written (or read) only once when the controller detects a new node in the network. If the node is disconnected and then reconnected the initialization is done again.
- Level LO: every 10 seconds is written (or read) one of the entities with this priority.
- Level HI: each 1 second is written (or read) one of the entities with this priority.

When you connect a device to the network, the controller read and write all entities without differentiating the priorities. Once this step is completed for each node, entities with priority INIT will no longer be requested.
The refresh time of the single entity depends, therefore, both on its level and on the number of entities of the same level and type (read / write).

9.19.2.1.1 Status variables

AI1 type (AI1T used if Piu1 = 0)	*Calculated evaporator temperature* (Te)
AI2 type (AI2T used if Piu1 = 0)	*Unit uf measure in use* (UdM)
Ai error timeout	*Working hour* (Pr40)
FSM status (Stat)	*Control algorithm status* (AlgS)
Used SH control parameters set (SetS)	*Alarm status* (AlSt)
Measured SH (SH)	*Configuration warning* (CoWa)
Used SH set-point (SpSH)	*Enable valve status* (EnaS)
Measured aspiration temperature (Ts)	*Request a reset status* (ParS)
Measured evaporator pressure (Pe)	*Resynchro request status* (ResS)

9.19.2.1.2 CONTROL VARIABLES

Tipo AI1 (AI1T utilizado si Piu1 = 0)	*DI1 function selection* (Ph11)
Tipo AI2 (AI2T utilizado si Piu1 = 0)	*DI1polarity* (Ph10)
Tiempo de espera de error de Ai	*DI2 function selection* (Ph21)
Habilitar comando de válvula (EnaV)	*DI2polarity* (Ph20)
Command (Cmd)	*DI1HV function selection* (Ph31)
Resynchronization request (ResR)	*DI1HVpolarity* (Ph30)
Functioning mode (Pr02)	*AI1 probe usage* (PIu1)
Manual valve position set-point (Pr03)	*AI2 probe usage* (PIu2)
Debug valve step rate (Prd0)	*AI1 probe type* (PIA1)
Debug minimum opening (Prd1)	*AI2 probe type* (PIA2)
Debug maximum opening (Prd2)	*AI3 probe type* (PIA3)
Stabilization delay (Pr08)	*AI4 probe type* (PIA4)
Stabilization position (Pr09)	*AI1 scaling X type* (P1Xt)
Main control type (Pr01)	*AI2 scaling X type* (P2Xt)
SH control parameters selection (SEtP)	*AI4 scaling X type* (P4Xt)
set 1: SH set-point (Pc01)	*AI1 scaling X max* (P1XM)
set 2: SH set-point (Pp01)	*AI2 scaling X max* (P2XM)

set 1: LoSH set-point (Pc02)	*AI4 scaling X max* (P4XM)
set 2: LoSH set-point (Pp02)	*AI1 scaling X min* (P1Xm)*AI2 scaling X min* (P2Xm)
set 1: HiSH set-point (Pc03)	*AI4 scaling X min* (P4Xm)
set 2: HiSH set-point (Pp03)	*AI1 scaling Y type* (P1Yt)
set 1: LOP set-point (Pc04)	*AI2 scaling Y type* (P2Yt)
set 2: LOP set-point (Pp04)	*AI4 scaling Y type* (P4Yt)
set 1: MOP set-point (Pc05)	*AI1 scaling Y max* (P1YM)
set 2: MOP set-point (Pp05)	*AI2 scaling Y max* (P2YM)
set 1: PID proportional band (Pc13)	*AI4 scaling Y max* (P4YM)
set 2: PID proportional band (Pp13)	*AI1 scaling Y min* (P1Ym)
set 1: PID integral time (Pc14)*set 2: PID integral time* (Pp14)	*AI2 scaling Y min* (P2Ym)
set 1: PID derivative time (Pc15)	*AI4 scaling Y min* (P4Ym)
set 2: PID derivative time (Pp15)	*Ts temperature offset* (OfsTs)
set 1: start-up delay (Pc20)	*Te temperature offset* (OfsTe)
set 2: start-up delay (Pp20)	*Type of refrigerant* (Pi00)
set 1: start-up position (Pc21)	*Enabling mode* (Pr06)
set 2: start-up position (Pp21)	
Fast action start threshold (FaTh)	
Fast action (Fast)	
PID neutral zone high threshold (PNHi)	
PID neutral zone low threshold (PNLO)	
PID proportional constant threshold (Pcz)	
PID SH filter time constant (SHFi)	
Relay fuction selection (Ph01)	
Relay polarity (Ph02)	

9.19.3 COMMANDS

For the variables that need an immediate refresh, commands are implemented.
The CommandOut allows to write commands on the device. The device performs the new values as soon as possible.
The CommanIn allows to read variables from device. The device send a CommandIn every 5 seconds and on event (see table).

Code	UNIPRO/SoHVAC Name		Sent variables	Event
38	Send EVCM command	Controller to EVDrive	bit 0: *Enable valve command* bit 1: *Resynchronization request* bit 2: *Functioning mode* 0 = algo 1 = manual bit 3: *SH control parameters selection* 0 = set 1 1 = set2 bit 4-7: reserved bit 8-15: bit 0-7 mask	
39	Send EVCM Manual Pos	Controller to EVDrive	*Manual valve position set-point*	
40	Receive EVCM Current Pos	EVDrive to Controller	*Current valve position %*	Current position < 5%
41	Receive EVCM Status	EVDrive to Controller	bit 0-7: *FSM status* bit 8: *Enable valve status* bit 9: *Resynchro request status* bit 10: *Used SH control parameters set* 0 = set 1 1 = set2	Every change
42	Receive EVCM Status	EVDrive to Controller	*Alarm status*	Every change

9.19.4 MODBUS serial communication

Serial communication via the RS-485 port may use the ModBus protocol. The accessible variables and parameters are those shown in the tables in the section “Configuration”. These same tables also include ModBus addresses (base 1).

The same rules covered earlier for the communication alarm management also apply to the valve *Enable valve command* (EnaV) (see “Communication error”).

The port configuration can be performed using dedicated configuration pages on EPJgraph or LCD display.
The default setting for ModBus communication via RS485 port is 9600 bps, even parity, 1 stop bit.

9.20 ALARMS AND ERRORS

9.20.1 Alarms and errors

The system supports a series of alarms related to both the system (memory, probes, communication, configuration, etc.), and the regulation algorithm (LoSH, HiSH, LOP, MOP, Low Pressure).

All the alarms, except the parameters alarm (EPar), are automatic, this means that they will be cancelled automatically once the cause of the alarm is removed.

The presence of an alarm status is signalled using the LED interface and using relays, if suitably configured.

The alarm status is always available in the Alarm status (AlSt), Configuration warning (CoWA) and Algorithm status (AlgS).

Alarm Status	Short Code	Alarm description	Parameters
Bit 0	EHd1	Memory error	--
Bit 1	EHd2	Configuration error	
Bit 2,3	Ecom	Communication error	Pa01, Pa02, Pr48
Bit 4	EPr1	Probe Ai1 error	Pr05
Bit 5	EPr2	Probe Ai2 error	Pr05
Bit 6	EPr3	Probe Ai3 error	Pr05
Bit 7	EPr4	Probe Ai4 error	Pr05
Bit 8	PSer	Power failure	Pa70, Pa71, Pb01
Bit 9	Ebat	Backup battery error	Pa75, Pa76 , Pb01, Ph21, Ph20
Bit 10	Ealg	Algorithm status	Pa11, Pa12, Pa20, Pa21, Pa22, Pa30, Pa31, Pa32, Pa33, Pa40, Pa41, Pa42, Pa50, Pa51, Pa52
Bit 12	Epar	Parameters error	–

9.20.2 Memory error

A memory error occurs when it is not possible to access data stored in the EEPROM memory: it is not therefore possible to access the parameter values stored on it, so they will assume default values from flash memory. Is also not possible to store new parameter values.
This alarm can be occurred if the automatic conversion procedure of the temperature and/or pressure parameters is halted. In this case also the parameters alarm is set and is necessary to reload the default parameters from the flash memory to clear the memory alarm.

9.20.3 Configuration error

In the Stand-by off state is checked the correctness and the congruence of the parameters. If the configuration is not correct, an alarm is generated, signalled by bit 1 of Alarm status (AlSt). To determine the significance of this single bit Configuration warning (CoWA) contains the error code generated during the parameter verification process.

CODIGO	RAZON	QUE HACER
0	Correct configuration (no error)	-
1	Pr06 value invalid, or if Pr06 = 0, Ph11 not set to enable valve, or, if Pr06 = 1, Ph31 not set to enable valve.	Check parameters Pr06, Ph11, Ph31
2	Invalid value for parameter PIA1	Set parameter to a valid value
3	Invalid value for parameter PIA2	
4	Invalid value for parameter PIA3	
5	Invalid value for parameter PIA4	
6	PIu1 configured as another Piux	Parameters Piu1, Piu2, Piu3 and Piu4 must each
7	PIu2 configured as another PIux	have different values, or null.
8	PIu3 configured as another PIux	Checked only if Pr01 ≥ 6
9	PIu4 configured as another Piux	
10	Contradiction between analog input typ (Pia1) and its utilization (Piu1)	Check parameters Piax and Piux.
11	Contradiction between analog input type (Pia2) and its utilization (Piu2)	Temperature is measured using probes of type NTC, pt1000, or scaling; pressure
12	Contradiction between analog input type (Pia3) and its utilization (Piu3)	is measured using current, tension or scaling probes.
13	Contradiction between analog input type (Pia4) and its utilization (Piu4)	Checked only if Pr01 ≥ 6
14	Awaiting AI1 configuration	Wait
15	Awaiting AI2 configuration	Wait
16	Awaiting AI3 configuration	Wait
17	Awaiting AI4 configuration	Wait
18	Awaiting analog inputs configurations	Wait
19	Limit error Xmax probe scaling	
20	Limit error Xmax probe scaling	
21	No AI configured for primary temperature	Check PIu1, PIu2, PIu3 and PIu4 parameters or pressure probe input and ensure one is dedicated to the primary temperature probe, and another to the primary pressure probe. Checked only if Pr01 ≥ 6
22	Error when copying the selected valve parameters to the generic valve	Try copyng again
23	A valve with incorrect parameters was selected	Set the valve parameters correctly and restart the instrument
24	A probe is not properly configured	Check PIAx prameters

9.20.4 Communication error

A communication error is signalled only if a suitable communication mode is selected (Pr06 ≥ 2), and the communication alarm is active (Pa01 = 1). Under these conditions, the driver expects the controller to periodically refresh the Enable valve command (EnaV).
If the refresh does not happen for more than half the time set in Communication alarm delay (Pa02), a warning is given. If the refresh does not happen for more than the time set in Communication alarm delay (Pa02), the communication is considered lost and communication alarm is set.
Management of this alarm depends on the mode selected. If Pr06 = 2÷5, a communication alarm state will cause the valve to be forced to the position determined by Communication error position (Pr48), and will then enter the Communication alarm (5) until the positioning process has completed and the communication start again. If Pr06 = 6÷9, a communication alarm status will place the valve into standalone mode, and DI1 enable the valve.
When the communication alarm is cleared, the valve will automatically return to the online mode.

Bit3	Bit2	Significance
0	0	No communication alarm
0	1	Warning
1	0	Communication alarm in standalone mode
1	1	Communication alarm

9.20.5 Probe error

The probe alarm state is monitored every main cycle and is shown in bits 4÷7 of Alarm status (AlSt) and also signalled by the relay, if configured.
Each bit is associated with a single analog input:
- bit 4: error state for probe connected to analog input AI1
- bit 5: error state for probe connected to analog input AI2
- bit 6: error state for probe connected to analog input AI3
- bit 7: error state for probe connected to analog input AI4

A probe error state is signalled and, if necessary, managed, only when the respective probe is in use.
Be aware that the measurements are valid only in operation modes in which the valve is enabled (FSM status ≥ 30); in other states, the analog inputs might not be configured correctly.
When the state machine enter the Stand-by off, after the parameters check, it is possible to determine which probes will be used: for example, if an analog positioner is set using setting Pr01 = 1, only an error on probe 1 will generate an alarm. If, on the other hand, an algorithm (Pr01 ≥ 6) is selected, both the selected primary probes (and, eventually, those chosen as secondary probes) will be able to set an alarm. The signalling of the alarms is thus active after the first entry into the Stand-by off.
In states where it is really necessary that the values from analog inputs are reliable, i.e. in analog positioner and SHalgorithm
mode, a more complete probe error management system is activated.
When the analog positioner function is selected (Analog positioner (30)), a probe error on a probe currently in use will trigger a positioning move to the value Probe alarm position (Pr05), and the system is changed to Probe alarm (3), where it will then wait for the clearing of the alarm from the relevant probe.
If a SH-algorithm is active, the probe errors monitored are those related to pressure and temperature measures. Any probe error will be handled as follows:
if the alarm relates to the primary probe (temperature or pressure), and another analog input has been configured as a backup probe (for temperature or pressure respectively), the measurement is automatically read from the backup probe; the corresponding Alarm status (AlSt) bit is set to signal a malfunction on the primary probe. Once the primary

probe's alarm state has been cleared, the readings are taken from the primary probe once more.
if no backup probe is defined, or if also the backup probe goes in alarm, the algorithm is disabled; the valve is positioned at Probe alarm position (Pr05), and the FSM enters the Probe alarm (3), where it awaits the clearing of the alarm state.
In each case, positioner or SH-algorithm, when the probe alarm is cleared, the state is automatically changed to Stand-by off.
If the valve is disabled while is in Probe alarm (3), there is a positioning to Stand-by position (Pr20) and then it enter Stand-by off.

9.20.6 Power failure and backup battery error

The EVDRIVE04 supports connection to a backup battery in order to allow a complete closure of the valve in the case of power supply failure.
There are two alarms: one for the power supply failure (bit 8), the other for a malfunction of the backup battery (bit 9).
Clearly, both these alarms make sense only if a backup battery is present (parameter Backup battery (Pb01 = 1).
The backup battery alarm also requires the configuration of DI2 (DI2 logic (PH20) and DI2 function (PH21)).
Note that the backup battery alarm only signalize the malfunction of the battery.
However, if the power fail alarm occurs, in addition to reporting, a valve safety shutdown procedure is started.
Once the alarm is cleared, the system is reset.
An alternative to the backup battery, a solenoid valve connected to the relay may be used to block the flow of the refrigerant.

9.20.7 Algorithm status

Bit 10 of Alarm status (AlSt) is raised if the measures needed by the algorithm are not valid or for SuperHeat algorithm alarms and warmings (LOP, MOP, LoSH, HiSH, LowPressure).
This monitoring is in effect only while the system is working in SH-algorithm and in manual mode.
The Algorithm status (AlgS) variable holds the specific state that generated the alarm, according to this table:

Algorithm Status	Description	
	Value 0	Value 1
Bit 0	Measures acquired	Data not read (Alarm status.b10 0→1)
Bit 1	algorithm is running	control algorithm halted
Bit 2	algorithm is active	algorithm is skipped (manual mode is active)
Bit 3	No LoSH algorithm is running	LoSH algorithm is running
Bit 4	No LoSH alarm	LoSH alarm (Alarm status.b10 0 > 1)
Bit 5	No HiSH algorithm is running	HiSH algorithm is running
Bit 6	No HiSH alarm	HiSH alarm (Alarm status.b10 0 > 1)
Bit 7	No LOP algorithm is running	LOP algorithm is running
Bit 8	No LOP alarm	LOP alarm (Alarm status.b10 0 > 1
Bit 9	No MOP algorithm is running	MOP algorithm is running
Bit 10	No MOP alarm	MOP alarm (Alarm status.b10 0 > 1)
Bit 11	No LowPressure	LowPressure (warning signal only)
Bit 12	No LowPressure alarm	LowPressure alarm (Alarm status.b10 0 > 1)

Note that if the manual mode is active, a read error of the measurement data due to incorrect probe configuration only generates a warning. While, if the control algorithm is running, the inability to read the measurements makes it impossible for the algorithm to continue, so this triggers a probe alarm.

Bits 0, 1 and 2 of Algorithm status (AlgS) are always calculated, while the other bits, given their dependencies on the active control algorithm, are only valid while SH-algorithm is running.

9.21 SUPERHEAT ALGORITHM PROTECTION FUNCTIONS

9.21.1 LoSH

When enabled (Pa10), this alarm is triggered when the SH drops below the low heating threshold (Pc02, Pp02, Pd02). The condition is signalled in the Algorithm status (AlgS) and, when the timeout (Pa12) expires, an alarm is set.
The alarm and signal are cleared automatically when the SH returns above the threshold (hysteresis defined in Pa11).

9.21.2 HiSH

When enabled (PA20), this alarm is triggered when the SH rises above the high heating threshold (Pc03, Pp03, Pd03), a bit is set in Algorithm status (AlgS) and, after the timeout (Pa22) expires, an alarm is set. The alarm and signal are cleared automatically when the SH returns below the threshold (hysteresis defined in Pa21).

9.21.3 LOP

When enabled (parameter Pa40), this alarm is triggered when the evaporation temperature (Te) drop below the LOP threshold (parameters Pc04, Pp04) and in the **Start-Up** (41) status activates a specific algorithm for managing the LOP, forcing the valve to open 100%, and in case of alarm re-entry stopping it at the current opening.
The condition is signalled in the *Algorithm status* (AlgS) and, when the timeout (Pa42) expires, an alarm is set.
This protection is most useful during start-up of the machine, when the evaporation temperature is effectively low.
It is possible to optimise this phase by setting a correct value in the valve opening on start-up parameter (parameters Pc21, Pp21). When the Te temperature returns within its limits (parameter Pa41 defines the hysteresis), the alarm and signalling are cleared and the normal regulation algorithm resumes.

9.21.4 MOP

When enabled (parameter Pa50), once the *Delay Bypass MOP* (parameter PA56) has elapsed since the activation of the regulation algorithm, this alarm is triggered when the evaporation temperature (Te) rise above the MOP threshold (parameters Pc05, Pp05) and activates a specific algorithm for managing the MOP, that increasing the superheat setpoint (parameters PA53, PA54, Pa55).
The MOP correction algorithm can force the opening of the valve, closing it of *MOP forced delta* (parameter Pa57) each *MOP forced time* (parameter Pa58) seconds. This function is disabled if *MOP forced delta* (Pa57 parameter) is null.
The condition is signalled in the *Algorithm status* (AlgS) and, when the timeout (parameter Pa52) expires, an alarm is set. When the Te temperature returns within its limits (parameter Pa51 defines the hysteresis), the alarm and its signal are cleared and the normal regulation algorithm resumes.

9.21.5 LowPressure

When enabled (Pa30), and the evaporation pressure (Pe) falls below the low pressure threshold (Pa31), an warning is signalled. After the timeout (Pa33) expires, the LP alarm is set. The alarm and its signal are cleared automatically when the pressure returns above the threshold. (Pa32 defines the hysteresis).

9.22 PARAMETERS ERROR

Bit 12 of Alarm status (AlSt) indicates that there was a problem during the automatic conversion of the parameters of temperature and/or pressure and it is possible that not all parameters have been successfully converted.

The automatic conversion of the parameters is performed only at the reset after a change in parameters Ph60 and/or Ph61.
If this alarm occurs, the user should check and correct all the parameters of temperature and pressure, cancel the alarm leading to 1 bit 0 of the variable Command (Cmd), and then reset the EVDRIVE04.

10 PRODUCT DATA ECC SCREW

ECCLA062-520						
UNIT ECCLA	**62**	**123**	**130**	**261**	**390**	**520**
OPERATING WEIGHT (lb)						
Al-Cu condenser coil	634.931315	1269.86263	1269.86263	2539.72526	3809.58789	5079.45052
Quantity of condensers	4	8	8	16	24	32
Cu-Cu condenser coil	943.578482	1887.15696	1887.15696	3774.31393	5661.47089	7548.62786
Quantity of condensers	4	8	8	16	24	32
Microchannel condenser coil	361.56	723.12	723.12	1446.23	2169.35	2892.46
Quantity of condensers	4	8	8	16	24	32
Refrigerant type	R-134A					
Refrigerant circuits	**1**	**1**	**2**	**2**	**3**	**4**
COMPRESSORS	**SCREW**					
Weight (lb)	866.42	1732.83	1477.10	2954.19	4431.29	5908.39
Quantity	1	2	1	2	3	4
No. Capacity step (%)	VFD	VFD	VFD	VFD	VFD	VFD
EVAPORATOR	**Shell and Tube**					
Quantity	1	1	1	1	2	2
Weight (empty, lb)	573.201882	573.201882	573.201882	1697.55942	2270.7613	3395.11884
Water connections (in)	4	6	6	6	8	10
	Shell box					
Quantity	3	5	5	10	15	19
Weight (empty, lb)	456.36	760.59	760.59	1521.19	2281.78	2890.26
Water connections (in)	4	6	6	6	8	10
	Brazed Plates					
Quantity	1	2	2	3	4	5
Weight (empty, lb)	110.23	454.15	454.15	681.23	908.30	1135.38
Water connections (in)	4	6	6	6	8	10
CONDENSER FANS						
Weight (lb)	467.38	934.76	934.76	1869.52	2804.28	3739.04
Fan cfm (per fan)	13600	13600	13600	13600	13600	13600
Diameter	800mm	800mm	800mm	800mm	800mm	800mm
No. Fans Al-Cu	4	8	8	16	24	32
No. Fans Cu-Cu	4	8	8	16	24	32
No. Fans Microchannel	4	8	8	16	24	32
HYDRONIC MODULE						
Pump 1 HP	7.5	15	15	30	40	40
Weight (lb)	152.12	266.76	266.76	507.06	617.29	617.29
Pump 2 HP	7.5	15	15	30	40	40
Weight (lb)	152.12	266.76	266.76	507.06	617.29	617.29
Water storage tank capacity (gal)	264	528	528	793	1057	1057
Weight (lb)	465	668	668	884	1102	1102
STRUCTURE						
Screws materials	**Standard (galvanized) / Optional (Stainless steel)**					
Structure Material	**Standard (galvanized)**					

TOP VIEW

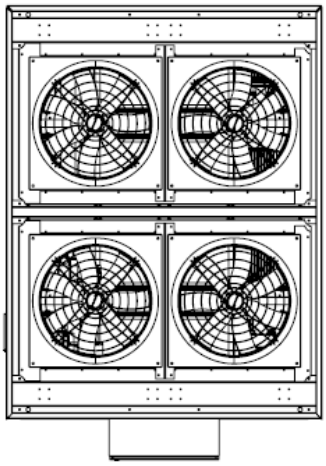

WATER OUTLET/INLET	
MODEL	DIAMETER
ECCLA062A46SB4	1.0"

PHYSICAL DATA						
MODEL	TON	A IN/MM	B IN/MM	C IN/MM	AVAILABLE POWER SUPPLY	WEIGHT (LB/KG)
ECCLA062A46SB4	62	82/2090	90/2297	118/3000	230-3-60 380-3-50 460-3-60 575-3-60	4003/1816

IMPORTANT :
THIS DRAWING IS ILLUSTRATIVE ONLY, CERTAIN DIMENSIONS AND DESIGN CAN CHANGE WITHOUT NOTICE, FOR MORE INFORMATION CONTACT YOUR SALES REPRESENTATIVE.

CLEARANCE :
1. PLACEMENT ON A LEVEL SURFACE FREE OF OBSTRUCTIONS (INCLUDING SNOW, FOR WINTER OPERATION) OR AIR RECIRCULATION ENSURES RATED PERFORMANCE, RELIABLE OPERATION AND EASE OF MAINTENANCE. SITE RESTRICTIONS MAY COMPROMISE MINIMUM CLEARANCES INDICATED BELOW, RESULTING IN UNPREDICTABLE AIR FLOW PATTERNS AND POSSIBLE DIMINISHED PERFORMANCE. ECO CHILLERS WILL OPTIMIZE OPERATION WITHOUT NUISANCE HIGH PRESSURE SAFETY CUTOUT; HOWEVER, THE SYSTEM DESIGNER MUST CONSIDER POTENTIAL PERFORMANCE DEGRADATION. ACCESS TO THE UNIT CONTROL CENTER ASSUMES THE UNIT IS NO HIGHER THAN ON SPRING ISOLATORS. RECOMMENDED MINIMUM CLEARANCES: SIDE TO WALL - 4 ' ; REAR TO WALL - 4' ; CONTROL PANEL END TO WALL - 4' ; TOP 120 ' - NO OBSTRUCTIONS ALLOWED; DISTANCE BETWEEN ADJACENT UNITS - 4' . NO MORE THAN ONE ADJACENT WALL MAY BE HIGHER THAN THE UNIT.

ISOMETRIC VIEW

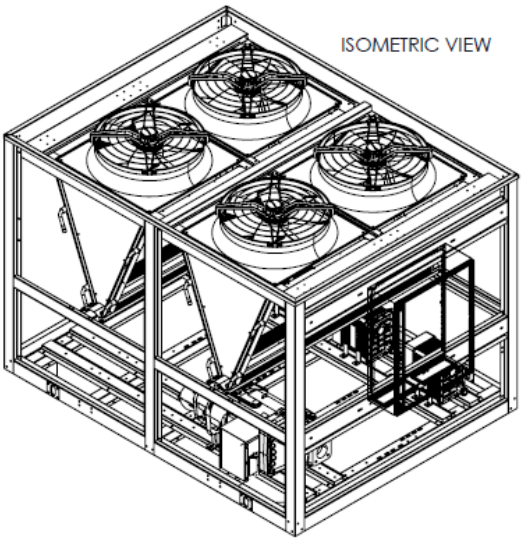

SIDE VIEW

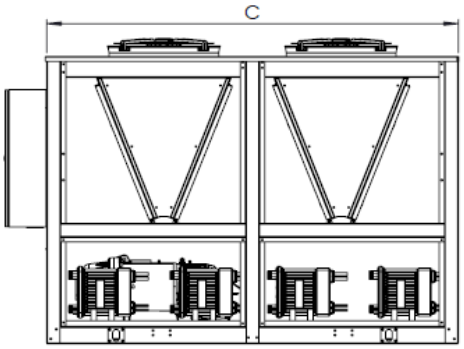

FRONT VIEW

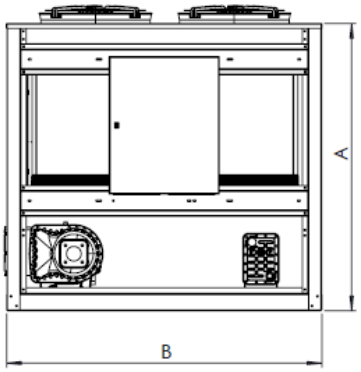

TOP VIEW

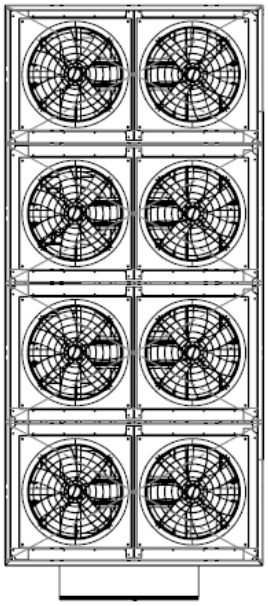

WATER OUTLET/INLET	
MODEL	DIAMETER
ECCLA123A46ST4	6.0"
ECCLA130A46ST4	6.0"

PHYSICAL DATA						
MODEL	TON	A IN/MM	B IN/MM	C IN/MM	AVAILABLE POWER SUPPLY	WEIGHT (LB/KG)
ECCLA123A46ST4	123	74/1877	87/2203	189/4817	230-3-60 380-3-50 460-3-60 575-3-60	6208/2816
ECCLA130A46ST4	130	74/1877	87/2203	189/4817		2700/5952

IMPORTANT :
THIS DRAWING IS ILLUSTRATIVE ONLY, CERTAIN DIMENSIONS AND DESIGN CAN CHANGE WITHOUT NOTICE, FOR MORE INFORMATION CONTACT YOUR SALES REPRESENTATIVE.

CLEARANCE :
1. PLACEMENT ON A LEVEL SURFACE FREE OF OBSTRUCTIONS (INCLUDING SNOW, FOR WINTER OPERATION) OR AIR RECIRCULATION ENSURES RATED PERFORMANCE, RELIABLE OPERATION AND EASE OF MAINTENANCE. SITE RESTRICTIONS MAY COMPROMISE MINIMUM CLEARANCES INDICATED BELOW, RESULTING IN UNPREDICTABLE AIR FLOW PATTERNS AND POSSIBLE DIMINISHED PERFORMANCE. ECO CHILLERS WILL OPTIMIZE OPERATION WITHOUT NUISANCE HIGH PRESSURE SAFETY CUTOUT; HOWEVER, THE SYSTEM DESIGNER MUST CONSIDER POTENTIAL PERFORMANCE DEGRADATION. ACCESS TO THE UNIT CONTROL CENTER ASSUMES THE UNIT IS NO HIGHER THAN ON SPRING ISOLATORS. RECOMMENDED MINIMUM CLEARANCES: SIDE TO WALL - 4 ' ; REAR TO WALL - 4' ; CONTROL PANEL END TO WALL - 4' ; TOP 120 ' - NO OBSTRUCTIONS ALLOWED; DISTANCE BETWEEN ADJACENT UNITS - 4' . NO MORE THAN ONE ADJACENT WALL MAY BE HIGHER THAN THE UNIT.

ISOMETRIC VIEW

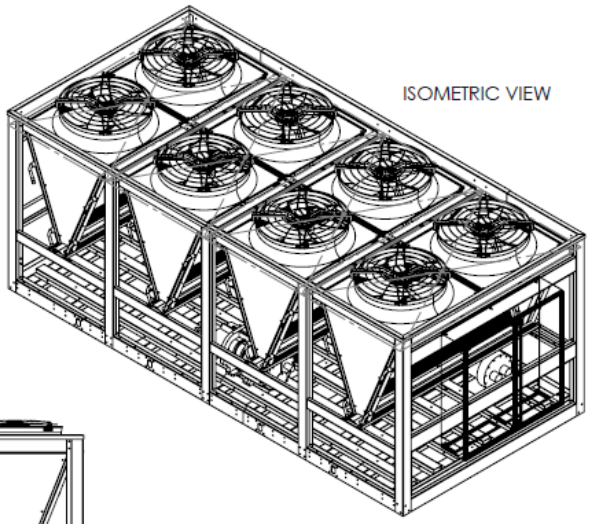

FRONT VIEW

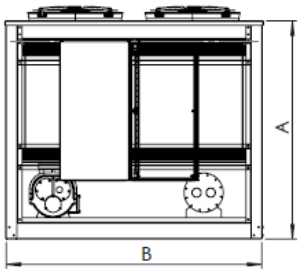

SIDE VIEW

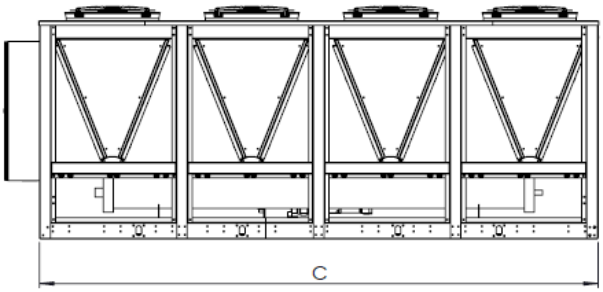

TOP VIEW

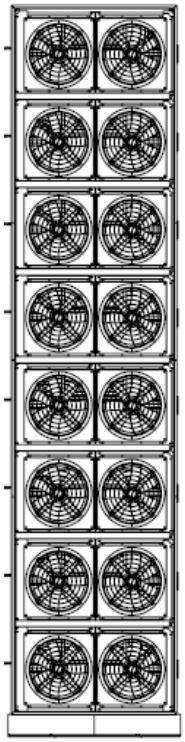

WATER OUTLET/INLET	
MODEL	DIAMETER
ECCLA261A46ST4	6.0"

PHYSICAL DATA						
MODEL	TON	A IN/MM	B IN/MM	C IN/MM	AVAILABLE POWER SUPPLY	WEIGHT (LB/KG)
ECCLA261A46ST4	261	91/2302	90/2295	376/9545	230-3-60 380-3-50 460-3-60 575-3-60	11664/5291

IMPORTANT :
THIS DRAWING IS ILLUSTRATIVE ONLY, CERTAIN DIMENSIONS AND DESIGN CAN CHANGE WITHOUT NOTICE, FOR MORE INFORMATION CONTACT YOUR SALES REPRESENTATIVE.

CLEARANCE :
1. PLACEMENT ON A LEVEL SURFACE FREE OF OBSTRUCTIONS (INCLUDING SNOW, FOR WINTER OPERATION) OR AIR RECIRCULATION ENSURES RATED PERFORMANCE, RELIABLE OPERATION AND EASE OF MAINTENANCE. SITE RESTRICTIONS MAY COMPROMISE MINIMUM CLEARANCES INDICATED BELOW, RESULTING IN UNPREDICTABLE AIR FLOW PATTERNS AND POSSIBLE DIMINISHED PERFORMANCE. ECO CHILLERS WILL OPTIMIZE OPERATION WITHOUT NUISANCE HIGH PRESSURE SAFETY CUTOUT; HOWEVER, THE SYSTEM DESIGNER MUST CONSIDER POTENTIAL PERFORMANCE DEGRADATION. ACCESS TO THE UNIT CONTROL CENTER ASSUMES THE UNIT IS NO HIGHER THAN ON SPRING ISOLATORS. RECOMMENDED MINIMUM CLEARANCES: SIDE TO WALL - 4 ' ; REAR TO WALL - 4' ; CONTROL PANEL END TO WALL - 4' ; TOP 120 ' - NO OBSTRUCTIONS ALLOWED; DISTANCE BETWEEN ADJACENT UNITS - 4' . NO MORE THAN ONE ADJACENT WALL MAY BE HIGHER THAN THE UNIT.

ISOMETRIC VIEW

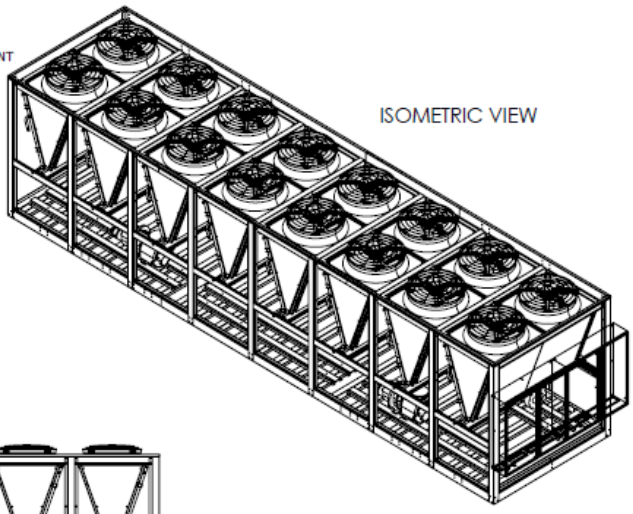

FRONT VIEW

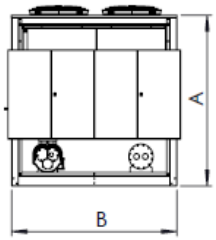

SIDE VIEW

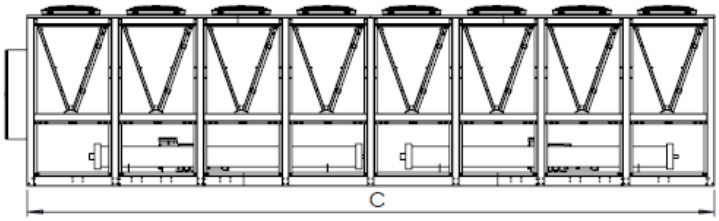

11 PRODUCT DATA ECC RECIPROCATING

ECCLA011-206.4									
UNIT ECCLA	**10.7**	**12.6**	**14.9**	**17.2**	**21.4**	**25.2**	**29.8**	**34.4**	**45**
Operating weight (lb)									
Al-Cu condenser coil	/	/	/	/	317.465	317.465	317.465	317.465	317.465
Quantity of condensers	/	/	/	/	2	2	2	2	2
Cu-Cu condenser coil	/	/	/	/	471.789	471.789	471.789	471.789	471.789
Quantity of condensers	/	/	/	/	2	2	2	2	2
Microchannel condenser coil	44.09	44.09	44.09	83.78	167.55	167.55	167.55	167.55	251.33
Quantity of condensers	2	2	2	1	2	2	2	2	3
Refrigerant Type	**R-410A**								
Refrigerant Circuits	1	1	1	1	1	1	1	1	1
COMPRESSORS	**SEMIHERMETIC**								
Weight (Lb)	392	392	392	392	784	784	784	784	1176
Quantity	1	1	1	1	2	2	2	2	3
No. Capacity step (%)	1	1	1	1	2	2	2	3	3
EVAPORATOR	**SHELL AND TUBE**								
Quantity	1	1	1	1	1	1	1	1	1
Weight (empty, Lb)	152.11	152.11	152.11	152.11	152.11	414.46	414.46	414.46	414.46
Water Connections (in)	2	2	2	2	2 1/2	2 1/2	2 1/2	3	3
	SHELL BOX								
Quantity	1	1	1	1	1	1	2	2	2
Weight (empty, Lb)	99.21	99.21	152.12	152.12	152.12	152.12	304.24	304.24	304.24
Water Connections (in)	2	2	2	2	2 1/2	2 1/2	2 1/2	3	3
	BRAZED PLATES								
Quantity	1	1	1	1	1	1	1	1	1
Weight (empty, Lb)	19.84	19.84	24.25	33.07	90.39	90.39	90.39	90.39	88.18
Water Connections (in)	2	2	2	2	2 1/2	2 1/2	2 1/2	3	3
CONDENSER FANS									
Weight (Lb)	116.84	116.84	116.84	116.84	116.84	233.69	233.69	233.69	350.53
Fan CFM (per fan)	13600	13600	13600	13600	13600	13600	13600	13600	13600
Diameter	800mm	800mm	800mm	800mm	800mm	800mm	800mm	800mm	800mm
No. Fans Al-Cu	/	/	/	/	1	2	2	2	3
No. Fans Cu-Cu	/	/	/	/	1	2	2	2	3
No. Microchannel	1	1	1	1	1	2	2	2	3
HYDRONIC MODULE									
Pump 1 (hp)	1	1	1.5	1.5	1.5	2	3	3	3
Weight (Lb)	30.86	30.86	37.48	37.48	37.48	41.89	52.91	52.91	52.91
Pump 2 (hp)	1	1	1.5	1.5	1.5	2	3	3	3
Weight (Lb)	30.86	30.86	37.48	37.48	37.48	41.89	52.91	52.91	52.91
Water storage tank cap (Gal)	13	26	26	40	53	79	79	79	132
Weight (Lb)	97	112	112	132	143	201	201	201	300
STRUCTURE									
Screws materials	**Standard (galvanized) / Optional (Stainless steel)**								
Structure Material	**Standard (galvanized)**								

ECCLA011-206.4									
UNIT ECCLA	**51.6**	**59.6**	**68.8**	**86**	**103.2**	**120.4**	**137.6**	**154.8**	**170**
Operating weight (lb)									
Al-Cu condenser coil	476.2	476.2	476.2	634.9	793.6	793.6	952.4	1111.13	1269.8
Quantity of condensers	3	3	3	4	5	5	6	7	8
Cu-Cu condenser coil	707.7	707.7	707.7	943.6	1179.5	1179.5	1415.4	1651.3	1887.2
Quantity of condensers	3	3	3	4	5	5	6	7	8
Microchannel condenser coil	251.3	271.2	271.2	361.6	451.9	451.9	542.3	632.7	723.1
Quantity of condensers	3	3	3	4	5	5	6	7	8
Refrigerant Type	**R-410A**								
Refrigerant Circuits	1	2	2	2	2	3	3	3	4
COMPRESSORS	**SEMIHERMETIC**								
Weight (Lb)	1176	1568	1568	1960	2352	2744	3136	3528	3920
Quantity	3	4	4	5	6	7	8	9	10
No. Capacity step (%)	3	4	4	5	6	7	8	9	10
EVAPORATOR	**SHELL AND TUBE**								
Quantity	2	3	3	4	4	5	6	6	7
Weight (empty, Lb)	414.5	414.5	414.5	414.5	414.5	890.6	890.6	890.6	890.6
Water Connections (in)	3	3	4	4	4	6	6	6	6
	SHELL BOX								
Quantity	2	3	3	4	4	5	6	6	7
Weight (empty, Lb)	304.2	456.4	456.4	608.5	608.5	760.6	912.7	912.7	1064.8
Water Connections (in)	3	3	4	4	4	6	6	6	6
	BRAZED PLATES								
Quantity	1	1	1	2	2	2	2	2	2
Weight (empty, Lb)	110.2	110.2	125.6	251.3	251.3	251.3	251.3	251.3	251.3
Water Connections (in)	3	3	4	4	4	6	6	6	6
CONDENSER FANS									
Weight (Lb)	233.7	467.4	467.4	584.2	701	817.2	934.7	1051.6	1168.4
Fan CFM (per fan)	13600	13600	13600	13600	13600	13600	13600	13600	13600
Diameter	800mm	800mm	800mm	800mm	800mm	800mm	800mm	800mm	800mm
No. Fans Al-Cu	2	4	4	5	6	7	8	9	10
No. Fans Cu-Cu	2	4	4	5	6	7	8	9	10
No. Microchannel	2	4	4	5	6	7	8	9	10
HYDRONIC MODULE									
Pump 1 (hp)	5	5	7.5	10	10	15	15	20	20
Weight (Lb)	114.6	114.6	152.1	187.4	187.4	266.7	266.7	352.7	352.7
Pump 2 (hp)	5	5	7.5	10	10	15	15	20	20
Weight (Lb)	114.6	114.6	152.1	187.4	187.4	266.7	266.7	352.7	352.7
Water storage tank cap (Gal)	132	132	264	264	528	528	528	528	528
Weight (Lb)	300	300	465	465	668	668	668	668	668
STRUCTURE									
Screws materials	**Standard (galvanized) / Optional (Stainless steel)**								
Structure Material	**Standard (galvanized)**								

ECCLA011-206.4									
UNIT ECCLA	**189**	**206.4**							
Operating weight (lb)									
Al-Cu condenser coil	1746	1904.8							
Quantity of condensers	11	12							
Cu-Cu condenser coil	2594.8	2830.7							
Quantity of condensers	11	12							
Microchannel condenser coil	994.3	1084.7							
Quantity of condensers	11	12							
Refrigerant Type	**R-410A**								
Refrigerant Circuits	4	4							
COMPRESSORS	**SEMIHERMETIC**								
Weight (Lb)	703.27	899.49							
Quantity	11	12							
No. Capacity step (%)	11	12							
EVAPORATOR	**SHELL AND TUBE**								
Quantity	1	1							
Weight (empty, Lb)	890.6	890.6							
Water Connections (in)	6	6							
	SHELL BOX								
Quantity	8	9							
Weight (empty, Lb)	511.5	575.4							
Water Connections (in)	6	6							
	BRAZED PLATES								
Quantity	2	2							
Weight (empty, Lb)	227.1	227.1							
Water Connections (in)	6	6							
CONDENSER FANS									
Weight (Lb)	1285.3	1402.1							
Fan CFM (per fan)	13600	13600							
Diameter	800mm	800mm							
No. Fans Al-Cu	11	12							
No. Fans Cu-Cu	11	12							
No. Microchannel	11	12							
HYDRONIC MODULE									
Pump 1 (hp)	20	20							
Weight (Lb)	352.7	352.7							
Pump 2 (hp)	20	20							
Weight (Lb)	352.7	352.7							
Water storage tank cap (Gal)	528	528							
Weight (Lb)	668	668							
STRUCTURE									
Screws materials	**Standard (galvahttps://www.msn.com/es-mx/feednized) / Optional (Stainless steel)**								
Structure Material	**Standard (galvanized)**								

TOP VIEW

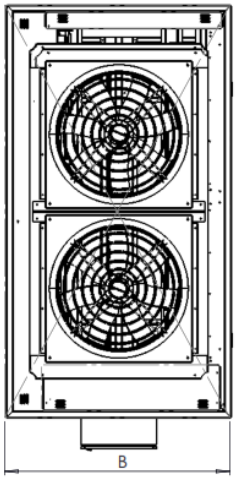

WATER OUTLET/INLET	
MODEL	DIAMETER
ECCLA036A46B4	2 1/2"
ECCLA053A46B4	3.0 "

IMPORTANT :
THIS DRAWING IS ILLUSTRATIVE ONLY, CERTAIN DIMENSIONS AND DESIGN CAN CHANGE WITHOUT NOTICE, FOR MORE INFORMATION CONTACT YOUR SALES REPRESENTATIVE.

CLEARANCE :
1. PLACEMENT ON A LEVEL SURFACE FREE OF OBSTRUCTIONS (INCLUDING SNOW, FOR WINTER OPERATION) OR AIR RECIRCULATION ENSURES RATED PERFORMANCE, RELIABLE OPERATION AND EASE OF MAINTENANCE. SITE RESTRICTIONS MAY COMPROMISE MINIMUM CLEARANCES INDICATED BELOW, RESULTING IN UNPREDICTABLE AIR FLOW PATTERNS AND POSSIBLE DIMINISHED PERFORMANCE. ECO CHILLERS WILL OPTIMIZE OPERATION WITHOUT NUISANCE HIGH PRESSURE SAFETY CUTOUT; HOWEVER, THE SYSTEM DESIGNER MUST CONSIDER POTENTIAL PERFORMANCE DEGRADATION. ACCESS TO THE UNIT CONTROL CENTER ASSUMES THE UNIT IS NO HIGHER THAN ON SPRING ISOLATORS. RECOMMENDED MINIMUM CLEARANCES: SIDE TO WALL - 4 ' ; REAR TO WALL - 4' ; CONTROL PANEL END TO WALL - 4' ; TOP 120 ' - NO OBSTRUCTIONS ALLOWED; DISTANCE BETWEEN ADJACENT UNITS - 4' . NO MORE THAN ONE ADJACENT WALL MAY BE HIGHER THAN THE UNIT.

PHYSICAL DATA						
MODEL	TON	A IN/MM	B IN/MM	C IN/MM	AVAILABLE POWER SUPPLY	WEIGHT (KG/LB)
ECCLA036A46B4	036	55/1399	58/1480	106/2702	230-3-60 380-3-50 460-3-60 575-3-60	876/1931
ECCLA053A46B4	053	55/1399	58/1480	106/2702		1201/2648

ISOMETRIC VIEW

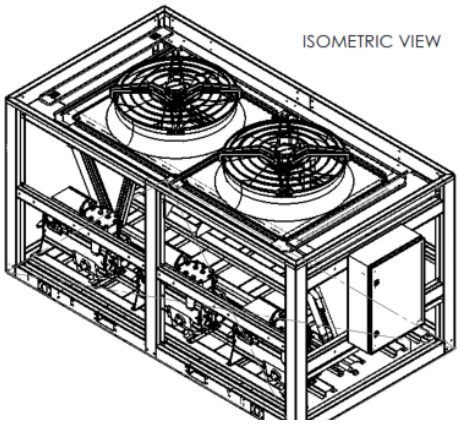

FRONT VIEW

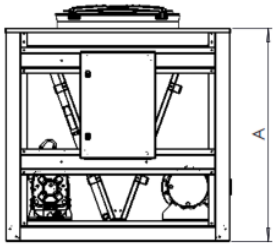

SIDE VIEW

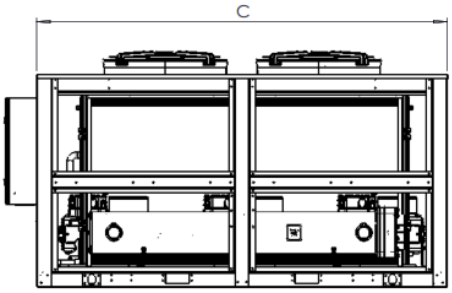

WATER OUTLET/INLET	
MODEL	DIAMETER
ECCLA072A46ST4	4.0"

PHYSICAL DATA						
MODEL	TON	A IN/MM	B IN/MM	C IN/MM	AVAILABLE POWER SUPPLY	WEIGHT (KG/LB)
ECCLA072A46ST4	72	2089	2293	2997	230-3-60 380-3-50 460-3-60 575-3-60	1587/3498

TOP VIEW

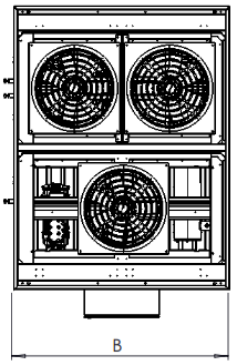

IMPORTANT :
THIS DRAWING IS ILLUSTRATIVE ONLY, CERTAIN DIMENSIONS AND DESIGN CAN CHANGE WITHOUT NOTICE, FOR MORE INFORMATION CONTACT YOUR SALES REPRESENTATIVE.

CLEARANCE :
1. PLACEMENT ON A LEVEL SURFACE FREE OF OBSTRUCTIONS (INCLUDING SNOW, FOR WINTER OPERATION) OR AIR RECIRCULATION ENSURES RATED PERFORMANCE, RELIABLE OPERATION AND EASE OF MAINTENANCE. SITE RESTRICTIONS MAY COMPROMISE MINIMUM CLEARANCES INDICATED BELOW, RESULTING IN UNPREDICTABLE AIR FLOW PATTERNS AND POSSIBLE DIMINISHED PERFORMANCE. ECO CHILLERS WILL OPTIMIZE OPERATION WITHOUT NUISANCE HIGH PRESSURE SAFETY CUTOUT; HOWEVER, THE SYSTEM DESIGNER MUST CONSIDER POTENTIAL PERFORMANCE DEGRADATION. ACCESS TO THE UNIT CONTROL CENTER ASSUMES THE UNIT IS NO HIGHER THAN ON SPRING ISOLATORS. RECOMMENDED MINIMUM CLEARANCES: SIDE TO WALL - 4 ' ; REAR TO WALL - 4' ; CONTROL PANEL END TO WALL - 4' ; TOP 120 ' - NO OBSTRUCTIONS ALLOWED; DISTANCE BETWEEN ADJACENT UNITS - 4' . NO MORE THAN ONE ADJACENT WALL MAY BE HIGHER THAN THE UNIT.

ISOMETRIC VIEW

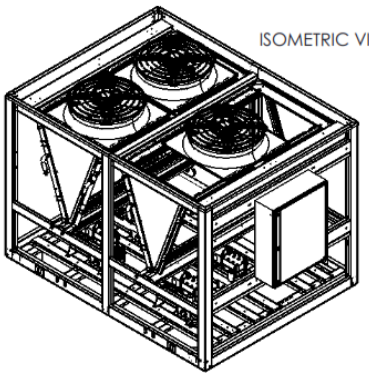

FRONT VIEW

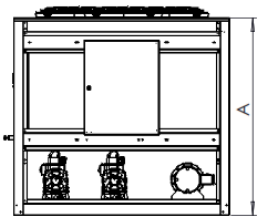

SIDE VIEW

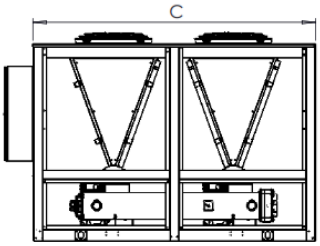

TOP VIEW

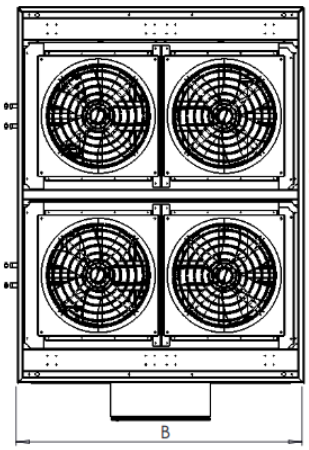

WATER OUTLET/INLET	
MODEL	DIAMETER
ECCLA090A46ST4	6.0"
ECCLA108A46ST4	6.0"

IMPORTANT :
THIS DRAWING IS ILLUSTRATIVE ONLY, CERTAIN DIMENSIONS AND DESIGN CAN CHANGE WITHOUT NOTICE, FOR MORE INFORMATION CONTACT YOUR SALES REPRESENTATIVE.

CLEARANCE :
1. PLACEMENT ON A LEVEL SURFACE FREE OF OBSTRUCTIONS (INCLUDING SNOW, FOR WINTER OPERATION) OR AIR RECIRCULATION ENSURES RATED PERFORMANCE, RELIABLE OPERATION AND EASE OF MAINTENANCE. SITE RESTRICTIONS MAY COMPROMISE MINIMUM CLEARANCES INDICATED BELOW, RESULTING IN UNPREDICTABLE AIR FLOW PATTERNS AND POSSIBLE DIMINISHED PERFORMANCE. ECO CHILLERS WILL OPTIMIZE OPERATION WITHOUT NUISANCE HIGH PRESSURE SAFETY CUTOUT; HOWEVER, THE SYSTEM DESIGNER MUST CONSIDER POTENTIAL PERFORMANCE DEGRADATION. ACCESS TO THE UNIT CONTROL CENTER ASSUMES THE UNIT IS NO HIGHER THAN ON SPRING ISOLATORS. RECOMMENDED MINIMUM CLEARANCES: SIDE TO WALL - 4 ' ; REAR TO WALL - 4' ; CONTROL PANEL END TO WALL - 4' ; TOP 120 ' - NO OBSTRUCTIONS ALLOWED; DISTANCE BETWEEN ADJACENT UNITS - 4' . NO MORE THAN ONE ADJACENT WALL MAY BE HIGHER THAN THE UNIT.

PHYSICAL DATA						
MODEL	TON	A IN/MM	B IN/MM	C IN/MM	AVAILABLE POWER SUPPLY	WEIGHT (KG/LB)
ECCLA090A46ST4	90	82/2091	90/2290	118/2998	230-3-60 380-3-50 460-3-60 575-3-60	1997/4402
ECCLA108A46ST4	108	82/2091	90/2290	118/2998		2174/4793

ISOMETRIC VIEW

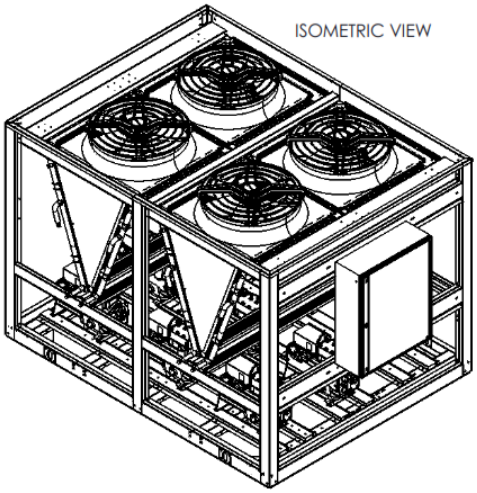

FRONT VIEW

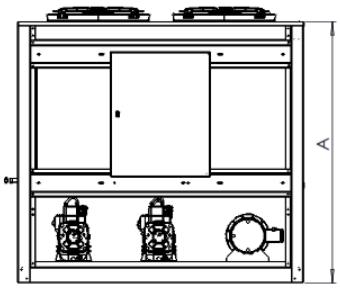

SIDE VIEW

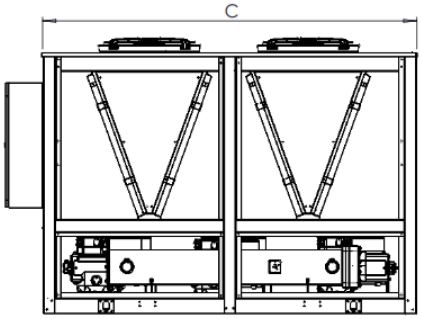

TOP VIEW

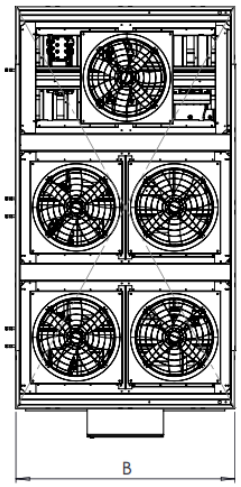

WATER OUTLET/INLET	
MODEL	DIAMETER
ECCLA126A46ST4	6.0"

IMPORTANT :
THIS DRAWING IS ILLUSTRATIVE ONLY, CERTAIN DIMENSIONS AND DESIGN CAN CHANGE WITHOUT NOTICE, FOR MORE INFORMATION CONTACT YOUR SALES REPRESENTATIVE.

CLEARANCE :
1. PLACEMENT ON A LEVEL SURFACE FREE OF OBSTRUCTIONS (INCLUDING SNOW, FOR WINTER OPERATION) OR AIR RECIRCULATION ENSURES RATED PERFORMANCE, RELIABLE OPERATION AND EASE OF MAINTENANCE. SITE RESTRICTIONS MAY COMPROMISE MINIMUM CLEARANCES INDICATED BELOW, RESULTING IN UNPREDICTABLE AIR FLOW PATTERNS AND POSSIBLE DIMINISHED PERFORMANCE. ECO CHILLERS WILL OPTIMIZE OPERATION WITHOUT NUISANCE HIGH PRESSURE SAFETY CUTOUT; HOWEVER, THE SYSTEM DESIGNER MUST CONSIDER POTENTIAL PERFORMANCE DEGRADATION. ACCESS TO THE UNIT CONTROL CENTER ASSUMES THE UNIT IS NO HIGHER THAN ON SPRING ISOLATORS. RECOMMENDED MINIMUM CLEARANCES: SIDE TO WALL - 4 ' ; REAR TO WALL - 4' ; CONTROL PANEL END TO WALL - 4' ; TOP 120 ' - NO OBSTRUCTIONS ALLOWED; DISTANCE BETWEEN ADJACENT UNITS - 4' . NO MORE THAN ONE ADJACENT WALL MAY BE HIGHER THAN THE UNIT.

PHYSICAL DATA						
MODEL	TON	A IN/MM	B IN/MM	C IN/MM	AVAILABLE POWER SUPPLY	WEIGHT (KG/LB)
ECCLA126A46ST4	126	2302	2294	4209	230-3-60 380-3-50 460-3-60 575-3-60	3240/7143

ISOMETRIC VIEW

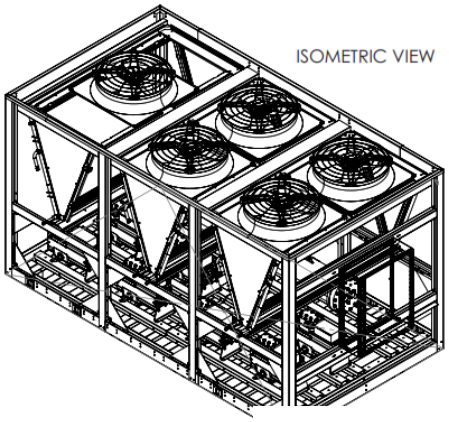

FRONT VIEW

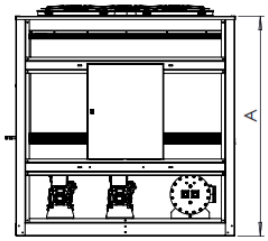

SIDE VIEW

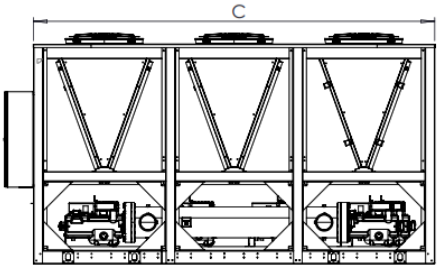

Ecochillers®

TOP VIEW

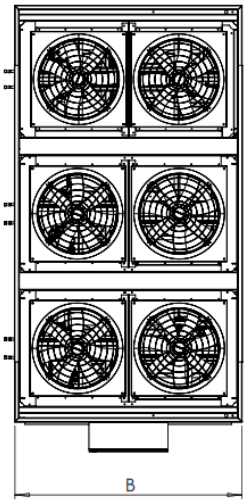

WATER OUTLET/INLET	
MODEL	DIAMETER
ECCLA144A46ST4	6.0"

PHYSICAL DATA						
MODEL	TON	A IN/MM	B IN/MM	C IN/MM	AVAILABLE POWER SUPPLY	WEIGHT (KG/LB)
ECCLA144A46ST4	126	2302	2294	4209	230-3-60 380-3-50 460-3-60 575-3-60	3515/7749

IMPORTANT :
THIS DRAWING IS ILLUSTRATIVE ONLY, CERTAIN DIMENSIONS AND DESIGN CAN CHANGE WITHOUT NOTICE, FOR MORE INFORMATION CONTACT YOUR SALES REPRESENTATIVE.

CLEARANCE :
1. PLACEMENT ON A LEVEL SURFACE FREE OF OBSTRUCTIONS (INCLUDING SNOW, FOR WINTER OPERATION) OR AIR RECIRCULATION ENSURES RATED PERFORMANCE, RELIABLE OPERATION AND EASE OF MAINTENANCE. SITE RESTRICTIONS MAY COMPROMISE MINIMUM CLEARANCES INDICATED BELOW, RESULTING IN UNPREDICTABLE AIR FLOW PATTERNS AND POSSIBLE DIMINISHED PERFORMANCE. ECO CHILLERS WILL OPTIMIZE OPERATION WITHOUT NUISANCE HIGH PRESSURE SAFETY CUTOUT; HOWEVER, THE SYSTEM DESIGNER MUST CONSIDER POTENTIAL PERFORMANCE DEGRADATION. ACCESS TO THE UNIT CONTROL CENTER ASSUMES THE UNIT IS NO HIGHER THAN ON SPRING ISOLATORS. RECOMMENDED MINIMUM CLEARANCES: SIDE TO WALL - 4 ' ; REAR TO WALL - 4' ; CONTROL PANEL END TO WALL - 4' ; TOP 120 ' - NO OBSTRUCTIONS ALLOWED; DISTANCE BETWEEN ADJACENT UNITS - 4' . NO MORE THAN ONE ADJACENT WALL MAY BE HIGHER THAN THE UNIT.

ISOMETRIC VIEW

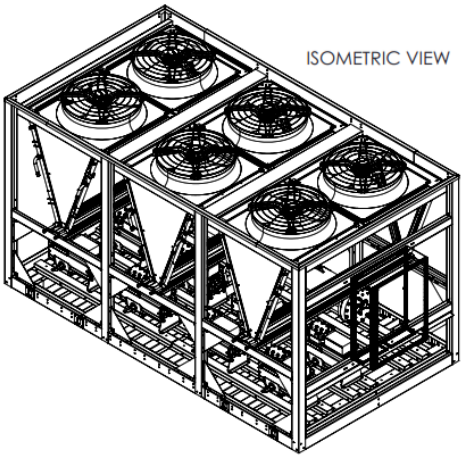

FRONT VIEW

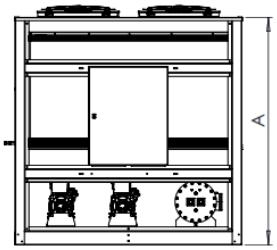

SIDE VIEW

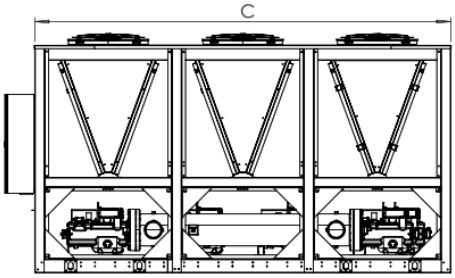

TOP VIEW

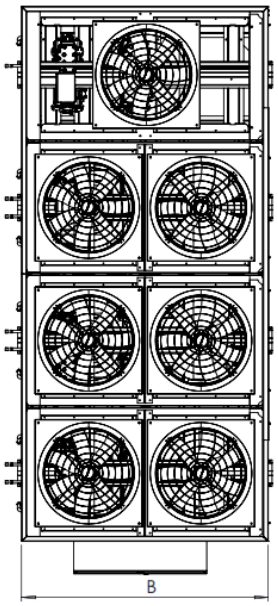

WATER OUTLET/INLET	
MODEL	DIAMETER
ECCLA162A46ST4	6.0"
ECCLA180A46ST4	6.0"

IMPORTANT :
THIS DRAWING IS ILLUSTRATIVE ONLY, CERTAIN DIMENSIONS AND DESIGN CAN CHANGE WITHOUT NOTICE, FOR MORE INFORMATION CONTACT YOUR SALES REPRESENTATIVE.

CLEARANCE :
1. PLACEMENT ON A LEVEL SURFACE FREE OF OBSTRUCTIONS (INCLUDING SNOW, FOR WINTER OPERATION) OR AIR RECIRCULATION ENSURES RATED PERFORMANCE, RELIABLE OPERATION AND EASE OF MAINTENANCE. SITE RESTRICTIONS MAY COMPROMISE MINIMUM CLEARANCES INDICATED BELOW, RESULTING IN UNPREDICTABLE AIR FLOW PATTERNS AND POSSIBLE DIMINISHED PERFORMANCE. ECO CHILLERS WILL OPTIMIZE OPERATION WITHOUT NUISANCE HIGH PRESSURE SAFETY CUTOUT; HOWEVER, THE SYSTEM DESIGNER MUST CONSIDER POTENTIAL PERFORMANCE DEGRADATION. ACCESS TO THE UNIT CONTROL CENTER ASSUMES THE UNIT IS NO HIGHER THAN ON SPRING ISOLATORS. RECOMMENDED MINIMUM CLEARANCES: SIDE TO WALL - 4 ' ; REAR TO WALL - 4' ; CONTROL PANEL END TO WALL - 4' ; TOP 120 ' - NO OBSTRUCTIONS ALLOWED; DISTANCE BETWEEN ADJACENT UNITS - 4' . NO MORE THAN ONE ADJACENT WALL MAY BE HIGHER THAN THE UNIT.

PHYSICAL DATA						
MODEL	TON	A IN/MM	B IN/MM	C IN/MM	AVAILABLE POWER SUPPLY	WEIGHT (KG/LB)
ECCLA162A46ST4	162	74/1877	87/2225	189/4815	230-3-60 380-3-50 460-3-60 575-3-60	3738/8241
ECCLA180A46ST4	180	74/1877	87/2225	189/4815		3916/8633

ISOMETRIC VIEW

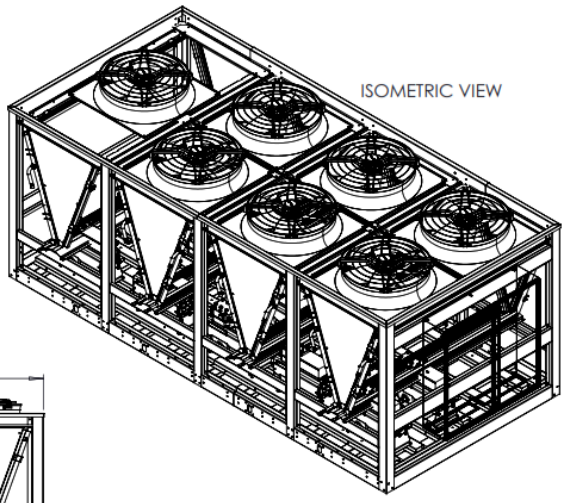

FRONT VIEW

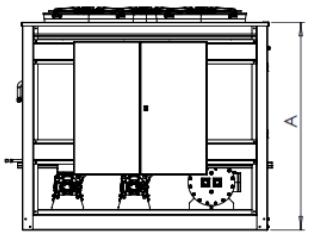

SIDE VIEW

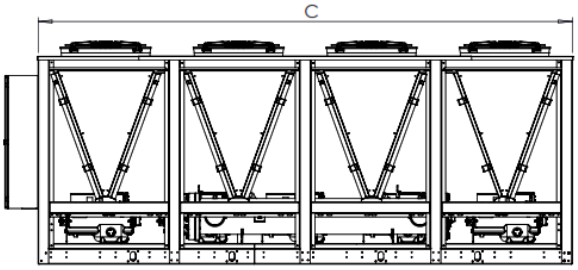

TOP VIEW

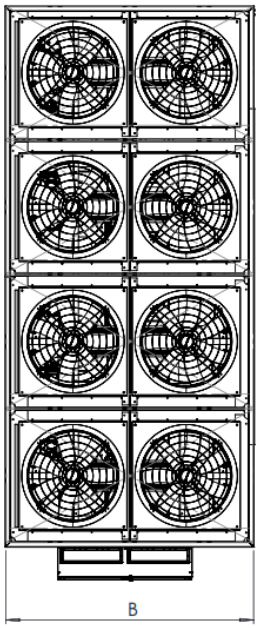

WATER OUTLET/INLET	
MODEL	DIAMETER
ECCLA196A46ST4	6.0"

PHYSICAL DATA						
MODEL	TON	A IN/MM	B IN/MM	C IN/MM	AVAILABLE POWER SUPPLY	WEIGHT (KG/LB)
ECCLA196A46ST4	196	1877	2216	4817	230-3-60 380-3-50 460-3-60 575-3-60	4191/9239

IMPORTANT :
THIS DRAWING IS ILLUSTRATIVE ONLY, CERTAIN DIMENSIONS AND DESIGN CAN CHANGE WITHOUT NOTICE, FOR MORE INFORMATION CONTACT YOUR SALES REPRESENTATIVE.

CLEARANCE :

1. PLACEMENT ON A LEVEL SURFACE FREE OF OBSTRUCTIONS (INCLUDING SNOW, FOR WINTER OPERATION) OR AIR RECIRCULATION ENSURES RATED PERFORMANCE, RELIABLE OPERATION AND EASE OF MAINTENANCE. SITE RESTRICTIONS MAY COMPROMISE MINIMUM CLEARANCES INDICATED BELOW, RESULTING IN UNPREDICTABLE AIR FLOW PATTERNS AND POSSIBLE DIMINISHED PERFORMANCE. ECO CHILLERS WILL OPTIMIZE OPERATION WITHOUT NUISANCE HIGH PRESSURE SAFETY CUTOUT; HOWEVER, THE SYSTEM DESIGNER MUST CONSIDER POTENTIAL PERFORMANCE DEGRADATION. ACCESS TO THE UNIT CONTROL CENTER ASSUMES THE UNIT IS NO HIGHER THAN ON SPRING ISOLATORS. RECOMMENDED MINIMUM CLEARANCES: SIDE TO WALL - 4 ' ; REAR TO WALL - 4' ; CONTROL PANEL END TO WALL - 4' ; TOP 120 ' - NO OBSTRUCTIONS ALLOWED; DISTANCE BETWEEN ADJACENT UNITS - 4' . NO MORE THAN ONE ADJACENT WALL MAY BE HIGHER THAN THE UNIT.

ISOMETRIC VIEW

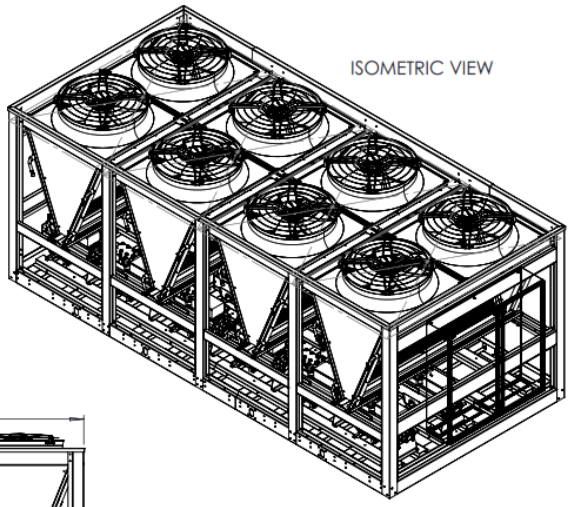

FRONT VIEW

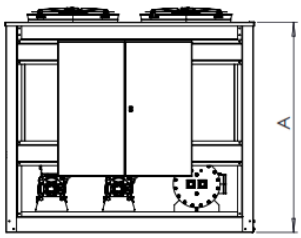

SIDE VIEW

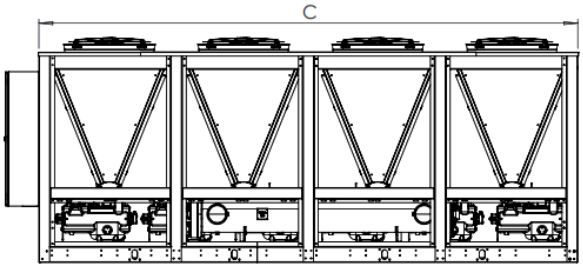

Ecochillers®

TOP VIEW

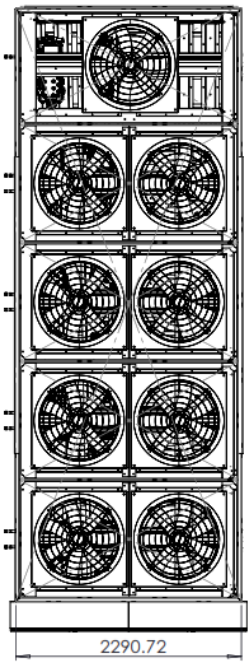

WATER OUTLET/INLET	
MODEL	DIAMETER
ECCLA214A46ST4	6.0"

IMPORTANT :
THIS DRAWING IS ILLUSTRATIVE ONLY, CERTAIN DIMENSIONS AND DESIGN CAN CHANGE WITHOUT NOTICE, FOR MORE INFORMATION CONTACT YOUR SALES REPRESENTATIVE.

CLEARANCE :
1. PLACEMENT ON A LEVEL SURFACE FREE OF OBSTRUCTIONS (INCLUDING SNOW, FOR WINTER OPERATION) OR AIR RECIRCULATION ENSURES RATED PERFORMANCE, RELIABLE OPERATION AND EASE OF MAINTENANCE. SITE RESTRICTIONS MAY COMPROMISE MINIMUM CLEARANCES INDICATED BELOW, RESULTING IN UNPREDICTABLE AIR FLOW PATTERNS AND POSSIBLE DIMINISHED PERFORMANCE. ECO CHILLERS WILL OPTIMIZE OPERATION WITHOUT NUISANCE HIGH PRESSURE SAFETY CUTOUT; HOWEVER, THE SYSTEM DESIGNER MUST CONSIDER POTENTIAL PERFORMANCE DEGRADATION. ACCESS TO THE UNIT CONTROL CENTER ASSUMES THE UNIT IS NO HIGHER THAN ON SPRING ISOLATORS. RECOMMENDED MINIMUM CLEARANCES: SIDE TO WALL - 4 ' ; REAR TO WALL - 4' ; CONTROL PANEL END TO WALL - 4' ; TOP 120 ' - NO OBSTRUCTIONS ALLOWED; DISTANCE BETWEEN ADJACENT UNITS - 4' . NO MORE THAN ONE ADJACENT WALL MAY BE HIGHER THAN THE UNIT.

PHYSICAL DATA						
MODEL	TON	A IN/MM	B IN/MM	C IN/MM	AVAILABLE POWER SUPPLY	WEIGHT (KG/LB)
ECCLA214A46ST4	214	90/2302	91/2291	236/5996	230-3-60 380-3-50 460-3-60 575-3-60	4894/10789

ISOMETRIC VIEW

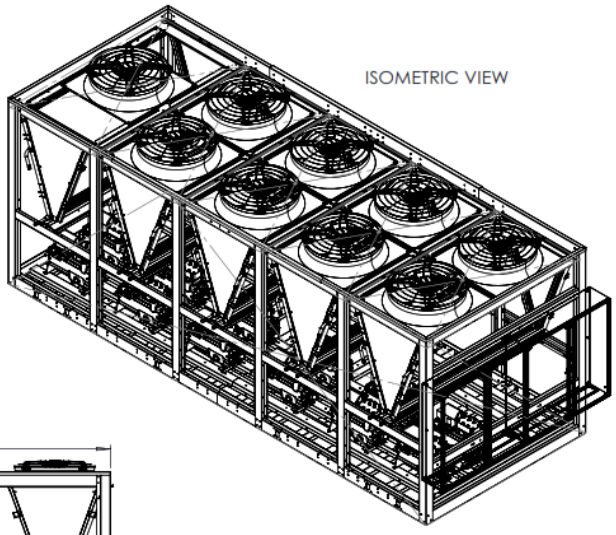

FRONT VIEW

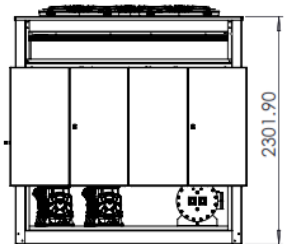

SIDE VIEW

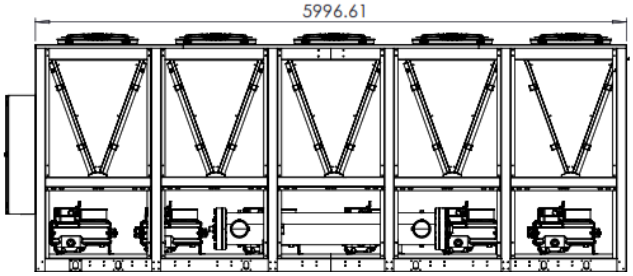

Ecochillers®

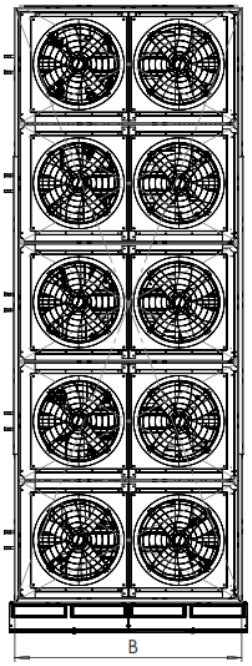

WATER OUTLET/INLET	
MODEL	DIAMETER
ECCLA232A46ST4	6.0"
ECCLA250A46ST4	6.0"

IMPORTANT :
THIS DRAWING IS ILLUSTRATIVE ONLY, CERTAIN DIMENSIONS AND DESIGN CAN CHANGE WITHOUT NOTICE, FOR MORE INFORMATION CONTACT YOUR SALES REPRESENTATIVE.

CLEARANCE :
1. PLACEMENT ON A LEVEL SURFACE FREE OF OBSTRUCTIONS (INCLUDING SNOW, FOR WINTER OPERATION) OR AIR RECIRCULATION ENSURES RATED PERFORMANCE, RELIABLE OPERATION AND EASE OF MAINTENANCE. SITE RESTRICTIONS MAY COMPROMISE MINIMUM CLEARANCES INDICATED BELOW, RESULTING IN UNPREDICTABLE AIR FLOW PATTERNS AND POSSIBLE DIMINISHED PERFORMANCE. ECO CHILLERS WILL OPTIMIZE OPERATION WITHOUT NUISANCE HIGH PRESSURE SAFETY CUTOUT; HOWEVER, THE SYSTEM DESIGNER MUST CONSIDER POTENTIAL PERFORMANCE DEGRADATION. ACCESS TO THE UNIT CONTROL CENTER ASSUMES THE UNIT IS NO HIGHER THAN ON SPRING ISOLATORS. RECOMMENDED MINIMUM CLEARANCES: SIDE TO WALL - 4 ' ; REAR TO WALL - 4' ; CONTROL PANEL END TO WALL - 4' ; TOP 120 ' - NO OBSTRUCTIONS ALLOWED; DISTANCE BETWEEN ADJACENT UNITS - 4' . NO MORE THAN ONE ADJACENT WALL MAY BE HIGHER THAN THE UNIT.

PHYSICAL DATA						
MODEL	TON	A IN/MM	B IN/MM	C IN/MM	AVAILABLE POWER SUPPLY	WEIGHT (KG/LB)
ECCLA232A46ST4	232	90/2302	91/2291	236/5996	230-3-60 380-3-50 460-3-60 575-3-60	5169/11395
ECCLA250A46ST4	250	90/2302	91/2291	236/5996		5347/11788

ISOMETRIC VIEW

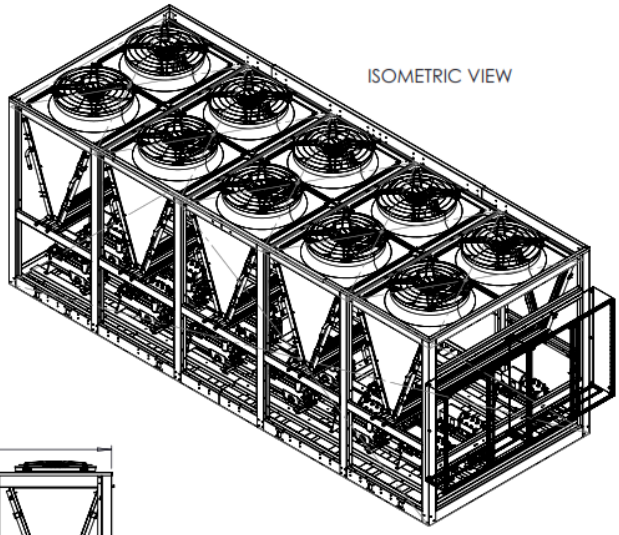

FRONT VIEW

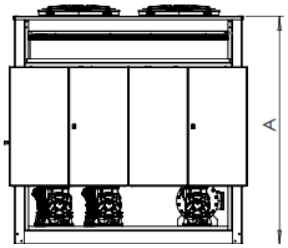

SIDE VIEW

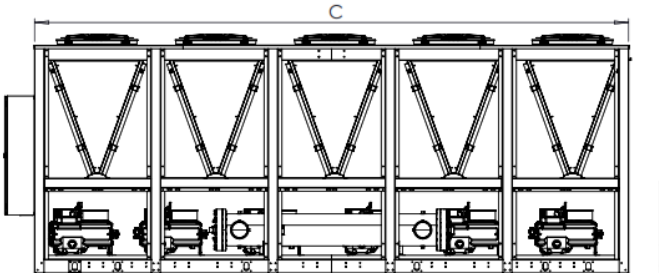

TOP VIEW

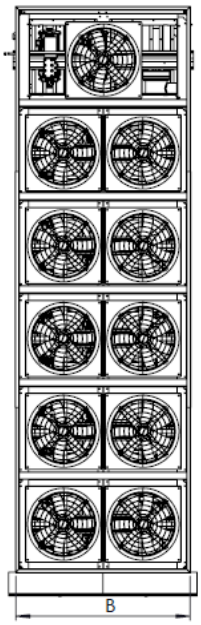

WATER OUTLET/INLET	
MODEL	DIAMETER
ECCLA268A46ST4	6.0"

PHYSICAL DATA						
MODEL	TON	A IN/MM	B IN/MM	C IN/MM	AVAILABLE POWER SUPPLY	WEIGHT (KG/LB)
ECCLA268A46ST4	268	74/1877	87/2217	283/7187	230-3-60 380-3-50 460-3-60 575-3-60	6126/13505

IMPORTANT :
THIS DRAWING IS ILLUSTRATIVE ONLY, CERTAIN DIMENSIONS AND DESIGN CAN CHANGE WITHOUT NOTICE, FOR MORE INFORMATION CONTACT YOUR SALES REPRESENTATIVE.

CLEARANCE :
1. PLACEMENT ON A LEVEL SURFACE FREE OF OBSTRUCTIONS (INCLUDING SNOW, FOR WINTER OPERATION) OR AIR RECIRCULATION ENSURES RATED PERFORMANCE, RELIABLE OPERATION AND EASE OF MAINTENANCE. SITE RESTRICTIONS MAY COMPROMISE MINIMUM CLEARANCES INDICATED BELOW, RESULTING IN UNPREDICTABLE AIR FLOW PATTERNS AND POSSIBLE DIMINISHED PERFORMANCE. ECO CHILLERS WILL OPTIMIZE OPERATION WITHOUT NUISANCE HIGH PRESSURE SAFETY CUTOUT; HOWEVER, THE SYSTEM DESIGNER MUST CONSIDER POTENTIAL PERFORMANCE DEGRADATION. ACCESS TO THE UNIT CONTROL CENTER ASSUMES THE UNIT IS NO HIGHER THAN ON SPRING ISOLATORS. RECOMMENDED MINIMUM CLEARANCES: SIDE TO WALL - 4 ' ; REAR TO WALL - 4' ; CONTROL PANEL END TO WALL - 4' ; TOP 120 ' - NO OBSTRUCTIONS ALLOWED; DISTANCE BETWEEN ADJACENT UNITS - 4' . NO MORE THAN ONE ADJACENT WALL MAY BE HIGHER THAN THE UNIT.

ISOMETRIC VIEW

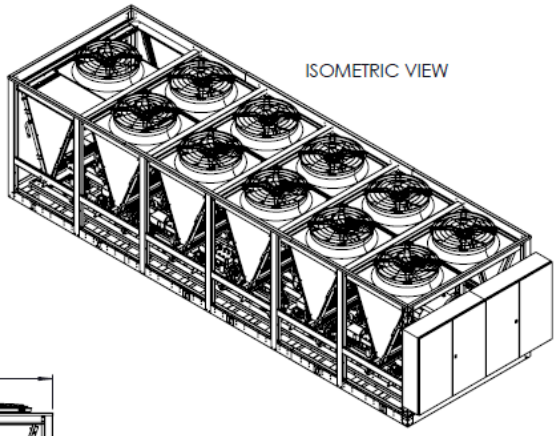

FRONT VIEW

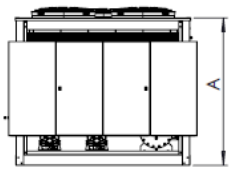

SIDE VIEW

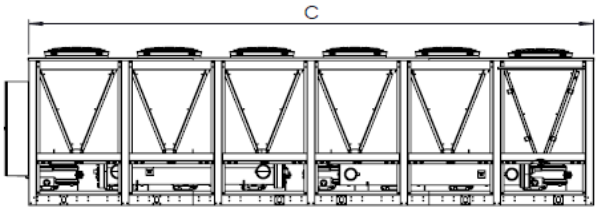

Ecochillers®

TOP VIEW

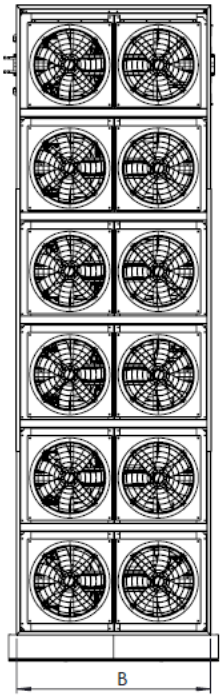

WATER OUTLET/INLET	
MODEL	DIAMETER
ECCLA286A46ST4	6.0"

PHYSICAL DATA						
MODEL	TON	A IN/MM	B IN/MM	C IN/MM	AVAILABLE POWER SUPPLY	WEIGHT (KG/LB)
ECCLA286A46ST4	286	74/1877	87/2217	283/7187	230-3-60 380-3-50 460-3-60 575-3-60	6423/14160

IMPORTANT :
THIS DRAWING IS ILLUSTRATIVE ONLY, CERTAIN DIMENSIONS AND DESIGN CAN CHANGE WITHOUT NOTICE, FOR MORE INFORMATION CONTACT YOUR SALES REPRESENTATIVE.

CLEARANCE :
1. PLACEMENT ON A LEVEL SURFACE FREE OF OBSTRUCTIONS (INCLUDING SNOW, FOR WINTER OPERATION) OR AIR RECIRCULATION ENSURES RATED PERFORMANCE, RELIABLE OPERATION AND EASE OF MAINTENANCE. SITE RESTRICTIONS MAY COMPROMISE MINIMUM CLEARANCES INDICATED BELOW, RESULTING IN UNPREDICTABLE AIR FLOW PATTERNS AND POSSIBLE DIMINISHED PERFORMANCE. ECO CHILLERS WILL OPTIMIZE OPERATION WITHOUT NUISANCE HIGH PRESSURE SAFETY CUTOUT; HOWEVER, THE SYSTEM DESIGNER MUST CONSIDER POTENTIAL PERFORMANCE DEGRADATION. ACCESS TO THE UNIT CONTROL CENTER ASSUMES THE UNIT IS NO HIGHER THAN ON SPRING ISOLATORS. RECOMMENDED MINIMUM CLEARANCES: SIDE TO WALL - 4 ' ; REAR TO WALL - 4' ; CONTROL PANEL END TO WALL - 4' ; TOP 120 ' - NO OBSTRUCTIONS ALLOWED; DISTANCE BETWEEN ADJACENT UNITS - 4' . NO MORE THAN ONE ADJACENT WALL MAY BE HIGHER THAN THE UNIT.

ISOMETRIC VIEW

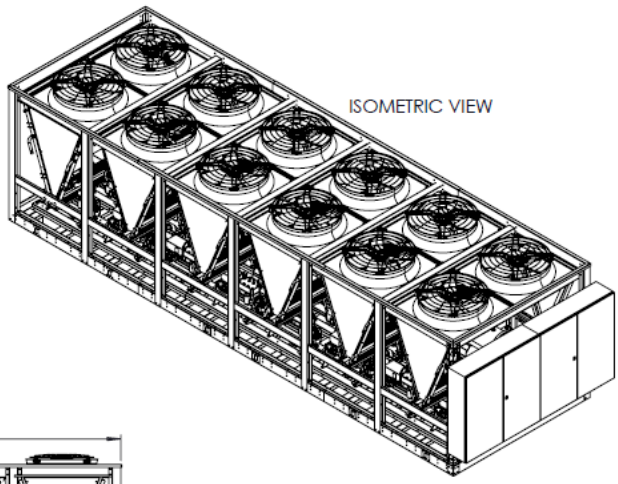

FRONT VIEW

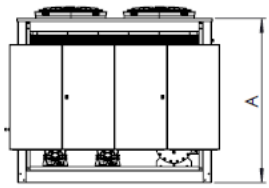

SIDE VIEW

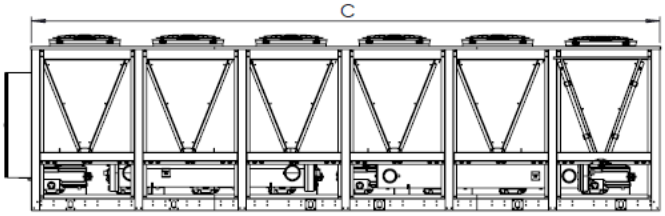

12 PRODUCT DATA ECT SCROLL

ECTLA006-350									
UNIT ECTLA	**004**	**006**	**009**	**010**	**013**	**015**	**020**	**025**	**030**
Operating weight (lb)									
Al-Cu condenser coil	/	/	/	/	/	/	158.7	158.7	158.7
Quantity of condensers	/	/	/	/	/	/	1	1	1
Cu-Cu condenser coil	/	/	/	/	/	/	235.9	235.9	235.9
Quantity of condensers	/	/	/	/	/	/	1	1	1
Microchannel condenser coil	37.48	22.05	22.05	44.09	44.09	44.09	90.39	90.39	180.78
Quantity of condensers	1	1	1	2	2	2	1	1	2
Refrigerant Type	**R-410A, R-32 & R-454B**								
Refrigerant Circuits	1	1	1	1	1	1	1	1	1
COMPRESSORS	**SCROLL**								
Weight (Lb)	63.93	74.96	88.18	143.3	143.3	141.1	284.4	302.0	282.2
Quantity	1	1	1	1	1	1	1	1	2
No. Capacity step (%)	1	1	1	1	1	1	1	1	2
EVAPORATOR	**SHELL AND TUBE**								
Quantity	1	1	1	1	1	1	1	1	1
Weight (empty, Lb)	152.12	152.12	152.12	152.12	152.12	152.12	152.12	414.5	414.5
Water Connections (in)	1 ¼	1 ¼	1 ½	2	2	2	2	2 ½	2 ½
	SHELL BOX								
Quantity	1	1	1	1	1	1	1	1	2
Weight (empty, Lb)	63.93	63.93	63.93	99.21	99.21	99.21	152.12	152.12	304.24
Water Connections (in)	1 ¼	1 ¼	1 ½	2	2	2	2	2 ½	2 ½
	BRAZED PLATES								
Quantity	1	1	1	1	1	1	1	1	1
Weight (empty, Lb)	8.82	15.43	15.43	19.84	19.84	24.25	33.07	90.39	90.39
Water Connections (in)	1 ¼	1 ¼	1 ½	2	2	2	2	2 ½	2 ½
CONDENSER FANS									
Weight (Lb)	46.3	46.3	46.3	116.84	116.84	116.84	116.84	116.84	233.69
Fan CFM (per fan)	7500	7500	7500	13600	13600	13600	13600	13600	13600
Diameter	500mm	500mm	500mm	800mm	800mm	800mm	800mm	800mm	800mm
No. Fans Al-Cu	/	/	/	/	/	/	1	1	2
No. Fans Cu-Cu	/	/	/	/	/	/	1	1	2
No. Microchannel	1	1	1	1	1	1	1	1	2
HYDRONIC MODULE									
Pump 1 (hp)	1	1	1	1.5	1.5	1.5	2	3	3
Weight (Lb)	30.86	30.86	30.86	37.48	37.48	37.48	41.89	52.91	52.91
Pump 2 (hp)	1	1	1	1.5	1.5	1.5	2	3	3
Weight (Lb)	30.86	30.86	30.86	37.48	37.48	37.48	41.89	52.91	52.91
Water storage tank cap (Gal)	13	13	26	26	60	53	53	79	79
Weight (Lb)	97	97	112	112	132	143	143	201	201
STRUCTURE									
Screws materials	**Standard (galvanized) / Optional (Stainless steel)**								
Structure Material	**Standard (galvanized)**								

ECTLA006-350									
UNIT ECTLA	**035**	**040**	**050**	**060**	**070**	**105**	**140**	**175**	**210**
Operating weight (lb)									
Al-Cu condenser coil	158.73	317.47	317.47	476.20	476.20	952.40	1269.86	1587.33	1904.79
Quantity of condensers	1	2	2	3	3	6	8	10	12
Cu-Cu condenser coil	235.89	471.79	471.79	707.68	707.68	1415.37	1887.16	2358.95	2830.74
Quantity of condensers	1	2	2	3	3	6	8	10	12
Microchannel condenser coil	90.39	76000	180.78	180.78	361.56	271.17	361.56	451.95	542.34
Quantity of condensers	1	2	2	2	4	3	4	5	6
Refrigerant Type	**R-410A, R-32 & R-454B**								
Refrigerant Circuits	**1**	**2**	**2**	**2**	**2**	**2**	**2**	**2**	**3**
COMPRESSORS	**SCROLL**								
Weight (Lb)	396.83	568.79	604.07	1137.6	793.66	1190.5	1587.3	1984.2	2381
Quantity	1	2	2	4	2	3	4	5	6
No. Capacity step (%)	1	2	2	4	2	3	4	5	6
EVAPORATOR	**SHELL AND TUBE**								
Quantity	1	1	1	1	1	1	1	1	2
Weight (empty, Lb)	414.47	414.46	414.46	414.46	414.46	890.66	890.66	890.66	1781.3
Water Connections (in)	3	3	3	4	4	4	6	6	6
	SHELL BOX								
Quantity	2	2	2	4	4	6	8	10	12
Weight (empty, Lb)	304.24	304.24	304.24	608.48	608.48	912.71	1216.9	1521.1	1825.4
Water Connections (in)	3	3	3	4	4	4	6	6	6
	BRAZED PLATES								
Quantity	1	1	1	1	2	2	2	2	3
Weight (empty, Lb)	90.39	90.39	88.18	110.23	180.78	454.15	454.15	454.15	681.23
Water Connections (in)	3	3	3	4	4	4	6	6	6
CONDENSER FANS									
Weight (Lb)	233.69	233.69	233.69	233.69	467.38	701.07	934.76	1168.45	1402.14
Fan CFM (per fan)	13600	13600	13600	13600	13600	13600	13600	13600	13600
Diameter	800mm	800mm	800mm	800mm	800mm	800mm	800mm	800mm	800mm
No. Fans Al-Cu	2	2	2	2	4	6	8	10	12
No. Fans Cu-Cu	2	2	2	2	4	6	8	10	12
No. Microchannel	2	2	2	2	4	6	8	10	12
HYDRONIC MODULE									
Pump 1 (hp)	3	5	5	7.5	7.5	10	15	20	20
Weight (Lb)	52.91	114.64	114.64	152.12	152.12	187.39	266.76	352.74	352.74
Pump 2 (hp)	3	5	5	7.5	7.5	10	15	20	20
Weight (Lb)	52.91	114.64	114.64	152.12	152.12	187.39	266.76	352.74	352.74
Water storage tank cap (Gal)	132	132	132	264	264	264	528	528	528
Weight (Lb)	300	300	300	465	465	465	668	668	668
STRUCTURE									
Screws materials	**Standard (galvanized) / Optional (Stainless steel)**								
Structure Material	**Standard (galvanized)**								

ECTLA006-350									
UNIT ECTLA	**245**	**280**	**315**	**350**					
Operating weight (lb)									
Al-Cu condenser coil	2222.2	2539.7	2857.1	3174.6					
Quantity of condensers	14	16	18	20					
Cu-Cu condenser coil	3302.5	3774.3	4246.1	4717.8					
Quantity of condensers	14	16	18	20					
Microchannel condenser coil	632.73	723.12	813.51	903.90					
Quantity of condensers	7	8	9	10					
Refrigerant Type	**R-410A, R-32 & R-454B**								
Refrigerant Circuits	**3**	3	3	4					
COMPRESSORS	**SCROLL**								
Weight (Lb)	2777.8	3174.6	3571.4	3968.3					
Quantity	7	8	9	10					
No. Capacity step (%)	7	8	9	10					
EVAPORATOR	**SHELL AND TUBE**								
Quantity	2	2	2	2					
Weight (empty, Lb)	1781.3	1305.1	1305.1	1305.1					
Water Connections (in)	6	6	6	6					
	SHELL BOX								
Quantity	14	16	18	20					
Weight (empty, Lb)	2129.6	2433.9	2738.1	3042.3					
Water Connections (in)	6	6	6	6					
	BRAZED PLATES								
Quantity	4	4	4	4					
Weight (empty, Lb)	908.30	908.30	908.30	908.30					
Water Connections (in)	6	6	6	6					
CONDENSER FANS									
Weight (Lb)	1635.8	1869.5	2103.2	2336.9					
Fan CFM (per fan)	13600	13600	13600	13600					
Diameter	800 mm	800 mm	800 mm	800 mm					
No. Fans Al-Cu	14	16	18	20					
No. Fans Cu-Cu	14	16	18	20					
No. Microchannel	14	16	18	20					
HYDRONIC MODULE									
Pump 1 (hp)	20	30	30	40					
Weight (Lb)	352.74	507.06	507.06	617.29					
Pump 2 (hp)	20	30	30	40					
Weight (Lb)	352.74	507.06	507.06	617.29					
Water storage tank cap (Gal)	793	793	793	500					
Weight (Lb)	884	884	884	1102					
STRUCTURE									
Screws materials	**Standard (galvanized) / Optional (Stainless steel)**								
Structure Material	**Standard (galvanized)**								

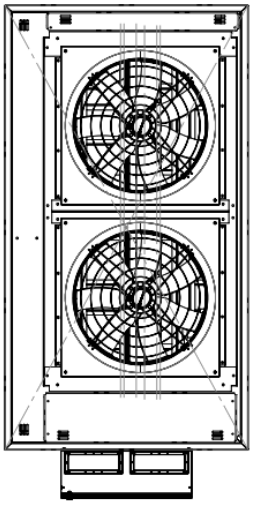

IMPORTANT :
THIS DRAWING IS ILLUSTRATIVE ONLY, CERTAIN DIMENSIONS AND DESIGN CAN CHANGE WITHOUT NOTICE, FOR MORE INFORMATION CONTACT YOUR SALES REPRESENTATIVE.

CLEARANCE :
1. PLACEMENT ON A LEVEL SURFACE FREE OF OBSTRUCTIONS (INCLUDING SNOW, FOR WINTER OPERATION) OR AIR RECIRCULATION ENSURES RATED PERFORMANCE, RELIABLE OPERATION AND EASE OF MAINTENANCE. SITE RESTRICTIONS MAY COMPROMISE MINIMUM CLEARANCES INDICATED BELOW, RESULTING IN UNPREDICTABLE AIR FLOW PATTERNS AND POSSIBLE DIMINISHED PERFORMANCE. ECO CHILLERS WILL OPTIMIZE OPERATION WITHOUT NUISANCE HIGH PRESSURE SAFETY CUTOUT; HOWEVER, THE SYSTEM DESIGNER MUST CONSIDER POTENTIAL PERFORMANCE DEGRADATION. ACCESS TO THE UNIT CONTROL CENTER ASSUMES THE UNIT IS NO HIGHER THAN ON SPRING ISOLATORS. RECOMMENDED MINIMUM CLEARANCES: SIDE TO WALL - 4 ' ; REAR TO WALL - 4' ; CONTROL PANEL END TO WALL - 4' ; TOP 120 ' - NO OBSTRUCTIONS ALLOWED; DISTANCE BETWEEN ADJACENT UNITS - 4' . NO MORE THAN ONE ADJACENT WALL MAY BE HIGHER THAN THE UNIT.

PHYSICAL DATA

MODEL	TON	A IN/MM	B IN/MM	C IN/MM	AVAILABLE POWER SUPPLY	WEIGHT (LB/KG)
ECTLA030A46B4	30	55.0/1399	106.6/2708.7	58.2/1478.6	230-3-60 380-3-50 460-3-60 575-3-60	688/1517
ECTLA035A46B4	35	55.0/1399	106.6/2708.7	58.2/1478.6		740/1631
ECTLA040A46ST4	40	55.0/1399	106.6/2708.7	58.2/1478.6		787/1735
ECTLA050A46ST4	50	55.0/1399	106.6/2708.7	58.2/1478.6		826/1821

WATER OUTLET/INLET

MODEL	DIAMETER
ECTLA030A46B4	2 1/2"
ECTLA035A46B4	2 1/2"
ECTLA040A46ST4	3.0"
ECTLA050A46ST4	3.0"

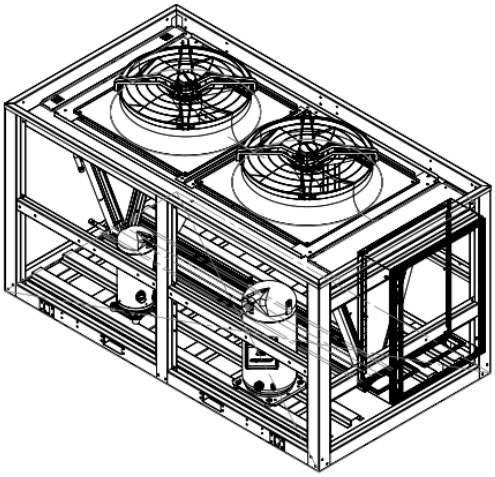

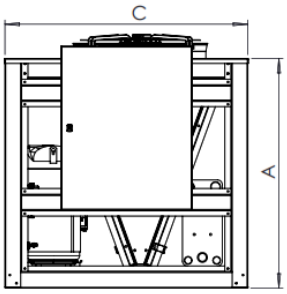

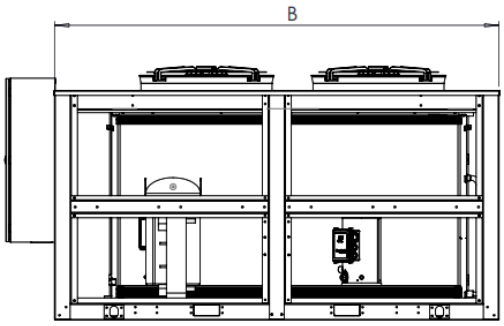

TOP VIEW

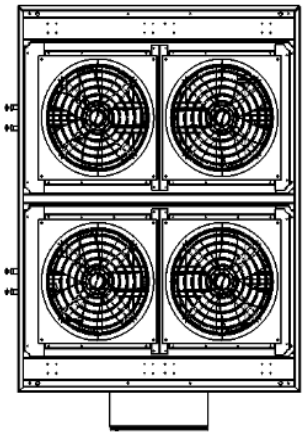

IMPORTANT :
THIS DRAWING IS ILLUSTRATIVE ONLY, CERTAIN DIMENSIONS AND DESIGN CAN CHANGE WITHOUT NOTICE, FOR MORE INFORMATION CONTACT YOUR SALES REPRESENTATIVE.

CLEARANCE :
1. PLACEMENT ON A LEVEL SURFACE FREE OF OBSTRUCTIONS (INCLUDING SNOW, FOR WINTER OPERATION) OR AIR RECIRCULATION ENSURES RATED PERFORMANCE, RELIABLE OPERATION AND EASE OF MAINTENANCE. SITE RESTRICTIONS MAY COMPROMISE MINIMUM CLEARANCES INDICATED BELOW, RESULTING IN UNPREDICTABLE AIR FLOW PATTERNS AND POSSIBLE DIMINISHED PERFORMANCE. ECO CHILLERS WILL OPTIMIZE OPERATION WITHOUT NUISANCE HIGH PRESSURE SAFETY CUTOUT; HOWEVER, THE SYSTEM DESIGNER MUST CONSIDER POTENTIAL PERFORMANCE DEGRADATION. ACCESS TO THE UNIT CONTROL CENTER ASSUMES THE UNIT IS NO HIGHER THAN ON SPRING ISOLATORS. RECOMMENDED MINIMUM CLEARANCES: SIDE TO WALL - 4 ' ; REAR TO WALL - 4' ; CONTROL PANEL END TO WALL - 4' ; TOP 120 ' - NO OBSTRUCTIONS ALLOWED; DISTANCE BETWEEN ADJACENT UNITS - 4' . NO MORE THAN ONE ADJACENT WALL MAY BE HIGHER THAN THE UNIT.

PHYSICAL DATA

MODEL	TON	A IN/MM	B IN/MM	C IN/MM	AVAILABLE POWER SUPPLY	WEIGHT (LB/KG)
ECTLA060A46ST4	60	82/2086	90/2289	118/2998	230-3-60 380-3-50 460-3-60 575-3-60	1273/2806
ECTLA070A46ST4	70	82/2086	90/2289	118/2998		1273/2806

WATER OUTLET/INLET

MODEL	DIAMETER
ECTLA060A46ST4	4.0"
ECTLA070A46ST4	4.0"

ISOMETRIC VIEW

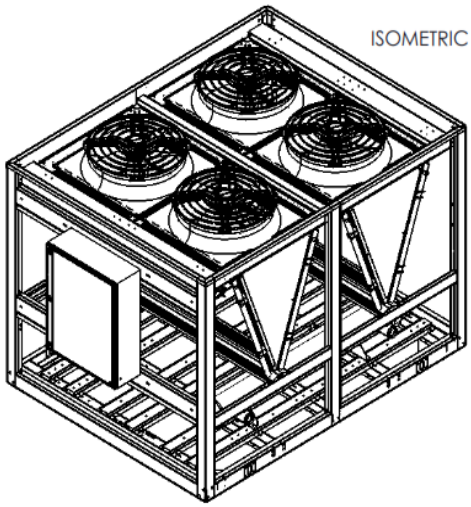

FRONT VIEW

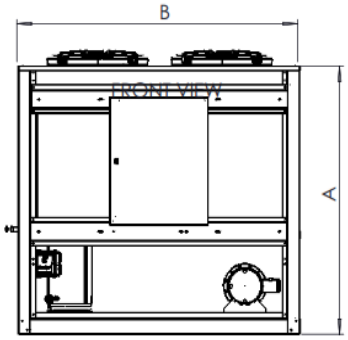

SIDE VIEW

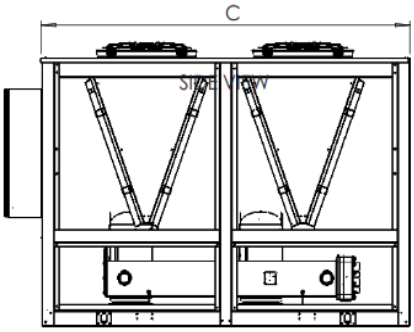

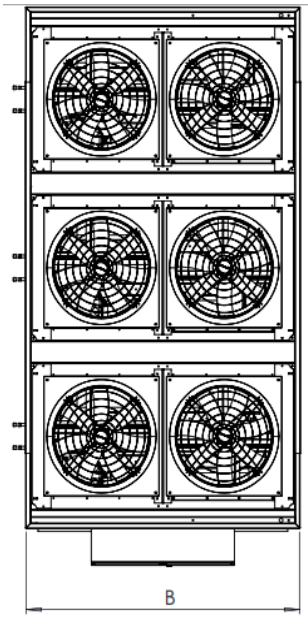

WATER OUTLET/INLET	
MODEL	DIAMETER
ECTLA105A46ST4	4.0"

PHYSICAL DATA						
MODEL	TON	A IN/MM	B IN/MM	C IN/MM	AVAILABLE POWER SUPPLY	WEIGHT (LB/KG)
ECTLA105A46ST4	105	90.6/2301	90/2290	166/4209	230-3-60 380-3-50 460-3-60 575-3-60	1451/3198

IMPORTANT :
THIS DRAWING IS ILLUSTRATIVE ONLY, CERTAIN DIMENSIONS AND DESIGN CAN CHANGE WITHOUT NOTICE, FOR MORE INFORMATION CONTACT YOUR SALES REPRESENTATIVE.

CLEARANCE :
1. PLACEMENT ON A LEVEL SURFACE FREE OF OBSTRUCTIONS (INCLUDING SNOW, FOR WINTER OPERATION) OR AIR RECIRCULATION ENSURES RATED PERFORMANCE, RELIABLE OPERATION AND EASE OF MAINTENANCE. SITE RESTRICTIONS MAY COMPROMISE MINIMUM CLEARANCES INDICATED BELOW, RESULTING IN UNPREDICTABLE AIR FLOW PATTERNS AND POSSIBLE DIMINISHED PERFORMANCE. ECO CHILLERS WILL OPTIMIZE OPERATION WITHOUT NUISANCE HIGH PRESSURE SAFETY CUTOUT; HOWEVER, THE SYSTEM DESIGNER MUST CONSIDER POTENTIAL PERFORMANCE DEGRADATION. ACCESS TO THE UNIT CONTROL CENTER ASSUMES THE UNIT IS NO HIGHER THAN ON SPRING ISOLATORS. RECOMMENDED MINIMUM CLEARANCES: SIDE TO WALL - 4 ' ; REAR TO WALL - 4' ; CONTROL PANEL END TO WALL - 4' ; TOP 120 ' - NO OBSTRUCTIONS ALLOWED; DISTANCE BETWEEN ADJACENT UNITS - 4' . NO MORE THAN ONE ADJACENT WALL MAY BE HIGHER THAN THE UNIT.

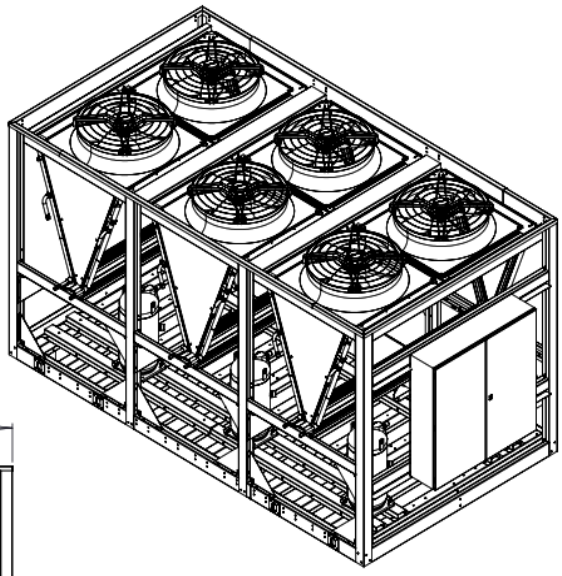

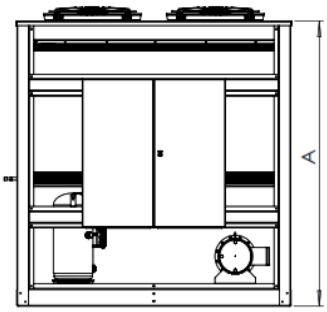

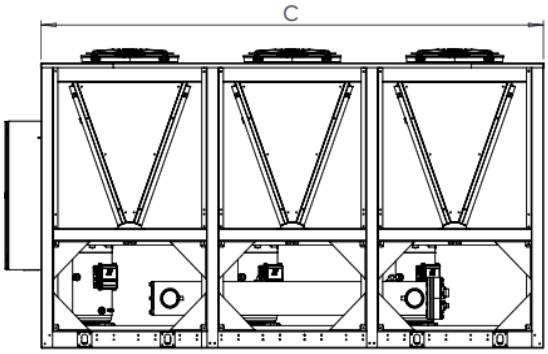

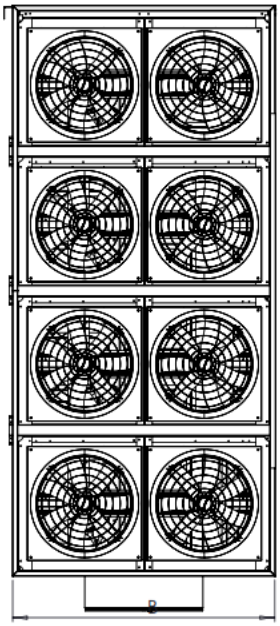

WATER OUTLET/INLET	
MODEL	DIAMETER
ECTLA140A46ST4	6.0"

PHYSICAL DATA						
MODEL	TON	A IN/MM	B IN/MM	C IN/MM	AVAILABLE POWER SUPPLY	WEIGHT (KG/LB)
ECTLA140A46ST4	140	73.8/1876	87.4/2219	189.6/4817	230-3-60 380-3-50 460-3-60 575-3-60	1574/3470

IMPORTANT :
THIS DRAWING IS ILLUSTRATIVE ONLY, CERTAIN DIMENSIONS AND DESIGN CAN CHANGE WITHOUT NOTICE, FOR MORE INFORMATION CONTACT YOUR SALES REPRESENTATIVE.

CLEARANCE :
1. PLACEMENT ON A LEVEL SURFACE FREE OF OBSTRUCTIONS (INCLUDING SNOW, FOR WINTER OPERATION) OR AIR RECIRCULATION ENSURES RATED PERFORMANCE, RELIABLE OPERATION AND EASE OF MAINTENANCE. SITE RESTRICTIONS MAY COMPROMISE MINIMUM CLEARANCES INDICATED BELOW, RESULTING IN UNPREDICTABLE AIR FLOW PATTERNS AND POSSIBLE DIMINISHED PERFORMANCE. ECO CHILLERS WILL OPTIMIZE OPERATION WITHOUT NUISANCE HIGH PRESSURE SAFETY CUTOUT; HOWEVER, THE SYSTEM DESIGNER MUST CONSIDER POTENTIAL PERFORMANCE DEGRADATION. ACCESS TO THE UNIT CONTROL CENTER ASSUMES THE UNIT IS NO HIGHER THAN ON SPRING ISOLATORS. RECOMMENDED MINIMUM CLEARANCES: SIDE TO WALL - 4 ' ; REAR TO WALL - 4' ; CONTROL PANEL END TO WALL - 4' ; TOP 120 ' - NO OBSTRUCTIONS ALLOWED; DISTANCE BETWEEN ADJACENT UNITS - 4' . NO MORE THAN ONE ADJACENT WALL MAY BE HIGHER THAN THE UNIT.

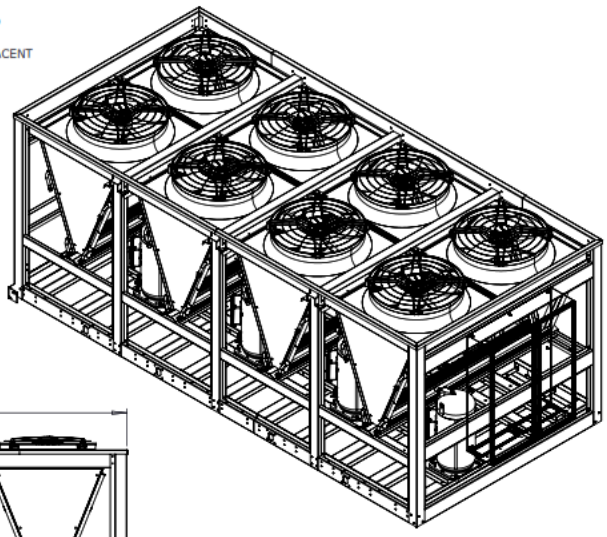

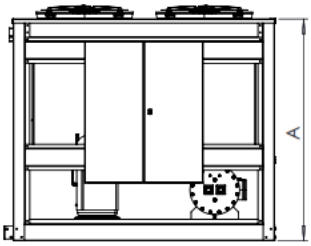

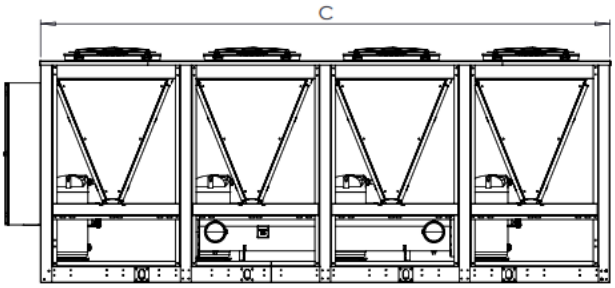

TOP VIEW

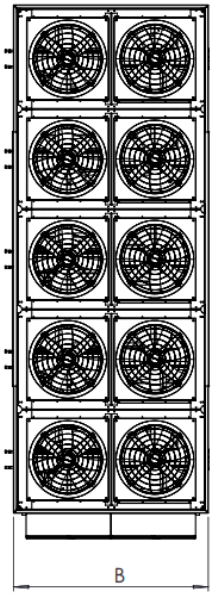

WATER OUTLET/INLET	
MODEL	DIAMETER
ECTLA175A46ST4	6.0"

IMPORTANT :
THIS DRAWING IS ILLUSTRATIVE ONLY, CERTAIN DIMENSIONS AND DESIGN CAN CHANGE WITHOUT NOTICE, FOR MORE INFORMATION CONTACT YOUR SALES REPRESENTATIVE.

CLEARANCE :
1. PLACEMENT ON A LEVEL SURFACE FREE OF OBSTRUCTIONS (INCLUDING SNOW, FOR WINTER OPERATION) OR AIR RECIRCULATION ENSURES RATED PERFORMANCE, RELIABLE OPERATION AND EASE OF MAINTENANCE. SITE RESTRICTIONS MAY COMPROMISE MINIMUM CLEARANCES INDICATED BELOW, RESULTING IN UNPREDICTABLE AIR FLOW PATTERNS AND POSSIBLE DIMINISHED PERFORMANCE. ECO CHILLERS WILL OPTIMIZE OPERATION WITHOUT NUISANCE HIGH PRESSURE SAFETY CUTOUT; HOWEVER, THE SYSTEM DESIGNER MUST CONSIDER POTENTIAL PERFORMANCE DEGRADATION. ACCESS TO THE UNIT CONTROL CENTER ASSUMES THE UNIT IS NO HIGHER THAN ON SPRING ISOLATORS. RECOMMENDED MINIMUM CLEARANCES: SIDE TO WALL - 4 ' ; REAR TO WALL - 4' ; CONTROL PANEL END TO WALL - 4' ; TOP 120 ' - NO OBSTRUCTIONS ALLOWED; DISTANCE BETWEEN ADJACENT UNITS - 4' . NO MORE THAN ONE ADJACENT WALL MAY BE HIGHER THAN THE UNIT.

PHYSICAL DATA

MODEL	TON	A IN/MM	B IN/MM	C IN/MM	AVAILABLE POWER SUPPLY	WEIGHT (KG/LB)
ECTLA175A46ST4	175	90/2301	90/2300	236/5996	230-3-60 380-3-50 460-3-60 575-3-60	3679/8110

ISOMETRIC VIEW

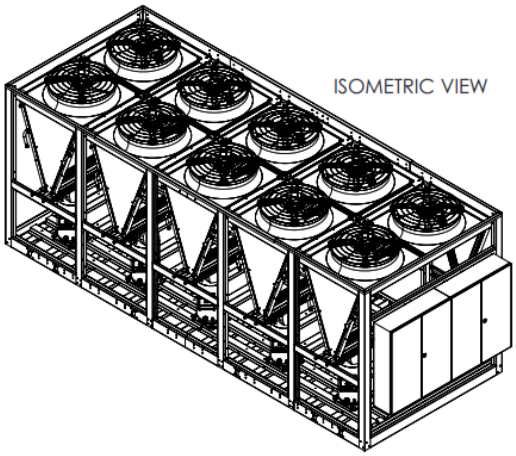

FRONT VIEW

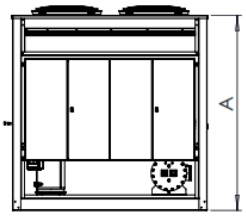

SIDE VIEW

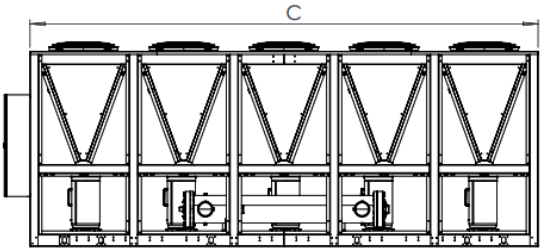

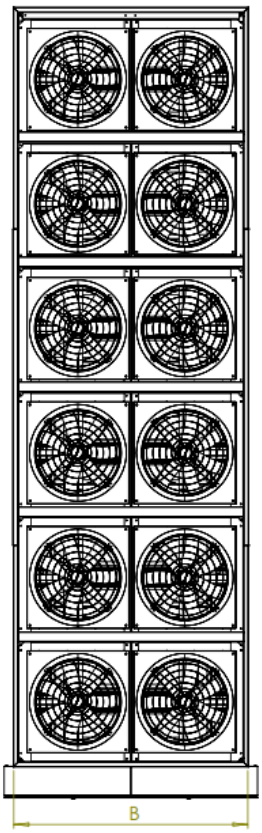

WATER OUTLET/INLET	
MODEL	DIAMETER
ECTLA210A46ST4	6.0"

PHYSICAL DATA						
MODEL	TON	A IN/MM	B IN/MM	C IN/MM	AVAILABLE POWER SUPPLY	WEIGHT (KG/LB)
ECTLA210A46ST4	210	1872	2217	7185	230-3-60 380-3-50 460-3-60 575-3-60	4420/9744

CLEARANCE :

1. PLACEMENT ON A LEVEL SURFACE FREE OF OBSTRUCTIONS (INCLUDING SNOW, FOR WINTER OPERATION) OR AIR RECIRCULATION ENSURES RATED PERFORMANCE, RELIABLE OPERATION AND EASE OF MAINTENANCE. SITE RESTRICTIONS MAY COMPROMISE MINIMUM CLEARANCES INDICATED BELOW, RESULTING IN UNPREDICTABLE AIR FLOW PATTERNS AND POSSIBLE DIMINISHED PERFORMANCE. ECO CHILLERS WILL OPTIMIZE OPERATION WITHOUT NUISANCE HIGH PRESSURE SAFETY CUTOUT; HOWEVER, THE SYSTEM DESIGNER MUST CONSIDER POTENTIAL PERFORMANCE DEGRADATION. ACCESS TO THE UNIT CONTROL CENTER ASSUMES THE UNIT IS NO HIGHER THAN ON SPRING ISOLATORS. RECOMMENDED MINIMUM CLEARANCES: SIDE TO WALL - 4 ' ; REAR TO WALL - 4' ; CONTROL PANEL END TO WALL - 4' ; TOP 120 ' - NO OBSTRUCTIONS ALLOWED; DISTANCE BETWEEN ADJACENT UNITS - 4' . NO MORE THAN ONE ADJACENT WALL MAY BE HIGHER THAN THE UNIT.

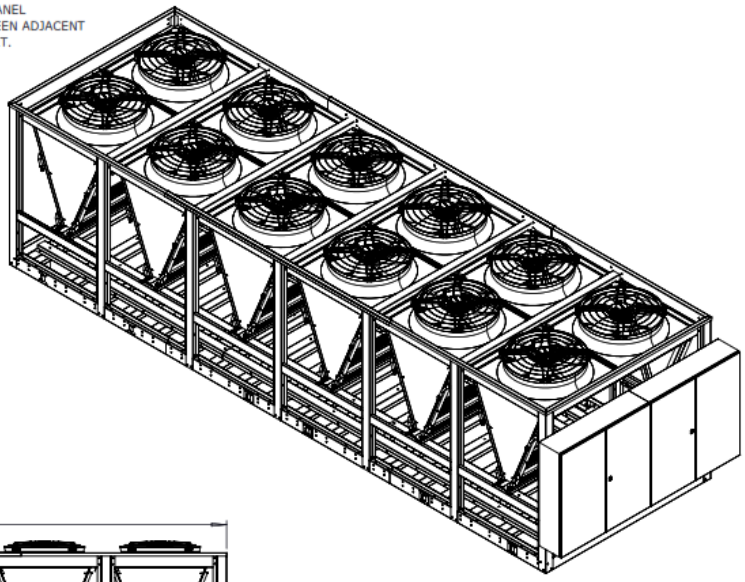

IMPORTANT :
THIS DRAWING IS ILLUSTRATIVE ONLY, CERTAIN DIMENSIONS AND DESIGN CAN CHANGE WITHOUT NOTICE, FOR MORE INFORMATION CONTACT YOUR SALES REPRESENTATIVE.

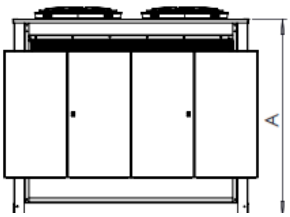

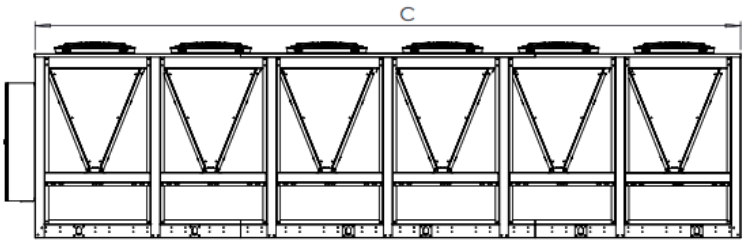

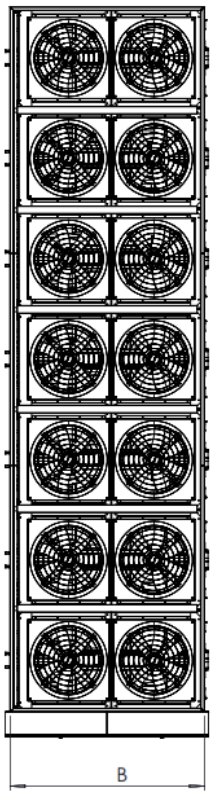

FRONT VIEW

WATER OUTLET/INLET	
MODEL	DIAMETER
ECTLA245A46ST4	6.0"

PHYSICAL DATA						
MODEL	TON	A IN/MM	B IN/MM	C IN/MM	AVAILABLE POWER SUPPLY	WEIGHT (KG/LB)
ECTLA245A46ST4	245	2291	2305	8362	230-3-60 380-3-50 460-3-60 575-3-60	5210/11486

IMPORTANT :
THIS DRAWING IS ILLUSTRATIVE ONLY, CERTAIN DIMENSIONS AND DESIGN CAN CHANGE WITHOUT NOTICE, FOR MORE INFORMATION CONTACT YOUR SALES REPRESENTATIVE.

CLEARANCE :
1. PLACEMENT ON A LEVEL SURFACE FREE OF OBSTRUCTIONS (INCLUDING SNOW, FOR WINTER OPERATION) OR AIR RECIRCULATION ENSURES RATED PERFORMANCE, RELIABLE OPERATION AND EASE OF MAINTENANCE. SITE RESTRICTIONS MAY COMPROMISE MINIMUM CLEARANCES INDICATED BELOW, RESULTING IN UNPREDICTABLE AIR FLOW PATTERNS AND POSSIBLE DIMINISHED PERFORMANCE. ECO CHILLERS WILL OPTIMIZE OPERATION WITHOUT NUISANCE HIGH PRESSURE SAFETY CUTOUT; HOWEVER, THE SYSTEM DESIGNER MUST CONSIDER POTENTIAL PERFORMANCE DEGRADATION. ACCESS TO THE UNIT CONTROL CENTER ASSUMES THE UNIT IS NO HIGHER THAN ON SPRING ISOLATORS. RECOMMENDED MINIMUM CLEARANCES: SIDE TO WALL - 4 ' ; REAR TO WALL - 4' ; CONTROL PANEL END TO WALL - 4' ; TOP 120 ' - NO OBSTRUCTIONS ALLOWED; DISTANCE BETWEEN ADJACENT UNITS - 4' . NO MORE THAN ONE ADJACENT WALL MAY BE HIGHER THAN THE UNIT.

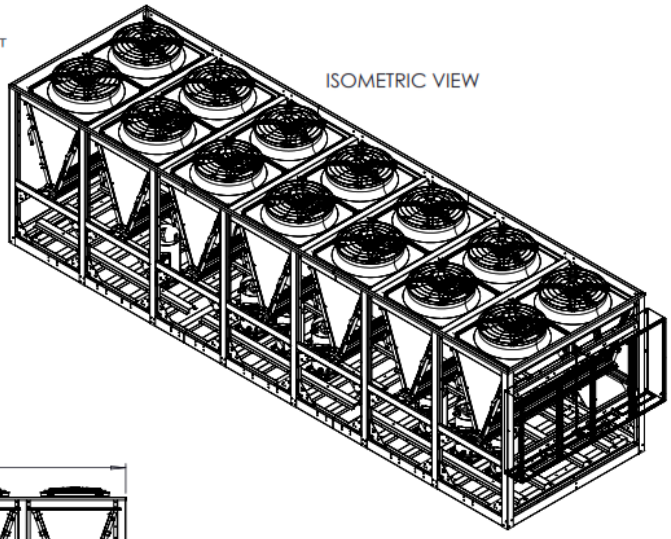

ISOMETRIC VIEW

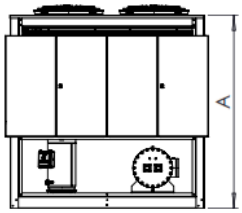

SIDE VIEW

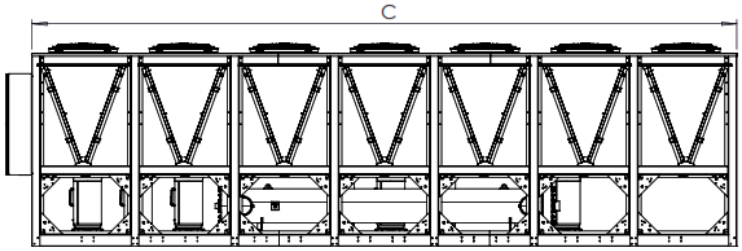

TOP VIEW

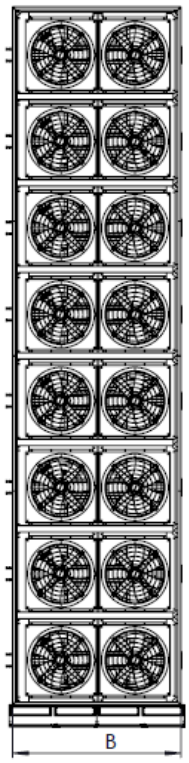

WATER OUTLET/INLET	
MODEL	DIAMETER
ECTLA260A46ST4	6.0"

PHYSICAL DATA						
MODEL	TON	A IN/MM	B IN/MM	C IN/MM	AVAILABLE POWER SUPPLY	WEIGHT (KG/LB)
ECTLA260A46ST4	260	90.6/2301	90.6/2301	376/9547	230-3-60 380-3-50 460-3-60 575-3-60	5459/12035

IMPORTANT :
THIS DRAWING IS ILLUSTRATIVE ONLY, CERTAIN DIMENSIONS AND DESIGN CAN CHANGE WITHOUT NOTICE, FOR MORE INFORMATION CONTACT YOUR SALES REPRESENTATIVE.

CLEARANCE :
1. PLACEMENT ON A LEVEL SURFACE FREE OF OBSTRUCTIONS (INCLUDING SNOW, FOR WINTER OPERATION) OR AIR RECIRCULATION ENSURES RATED PERFORMANCE, RELIABLE OPERATION AND EASE OF MAINTENANCE. SITE RESTRICTIONS MAY COMPROMISE MINIMUM CLEARANCES INDICATED BELOW, RESULTING IN UNPREDICTABLE AIR FLOW PATTERNS AND POSSIBLE DIMINISHED PERFORMANCE. ECO CHILLERS WILL OPTIMIZE OPERATION WITHOUT NUISANCE HIGH PRESSURE SAFETY CUTOUT; HOWEVER, THE SYSTEM DESIGNER MUST CONSIDER POTENTIAL PERFORMANCE DEGRADATION. ACCESS TO THE UNIT CONTROL CENTER ASSUMES THE UNIT IS NO HIGHER THAN ON SPRING ISOLATORS. RECOMMENDED MINIMUM CLEARANCES: SIDE TO WALL - 4 ' ; REAR TO WALL - 4' ; CONTROL PANEL END TO WALL - 4' ; TOP 120 ' - NO OBSTRUCTIONS ALLOWED; DISTANCE BETWEEN ADJACENT UNITS - 4' . NO MORE THAN ONE ADJACENT WALL MAY BE HIGHER THAN THE UNIT.

ISOMETRIC VIEW

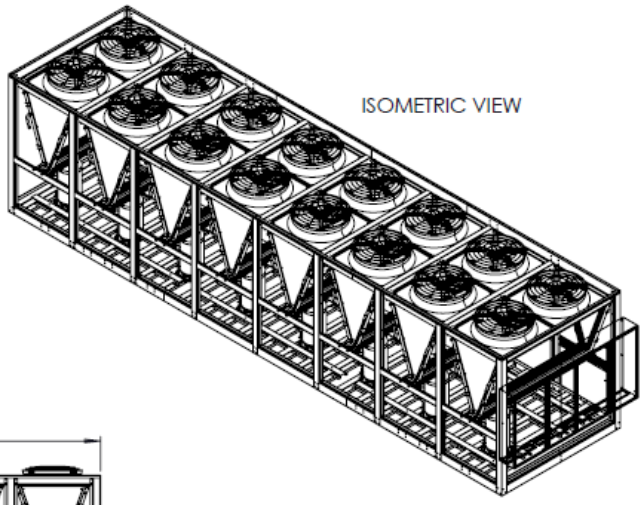

FRONT VIEW

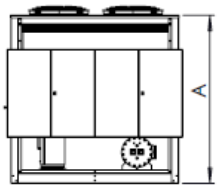

SIDE VIEW

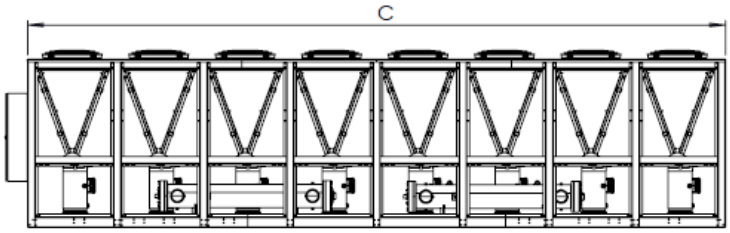

13 SCHEMATIC DIAGRAM

13.1 ECTLA004A46ST4VV (4 TON)

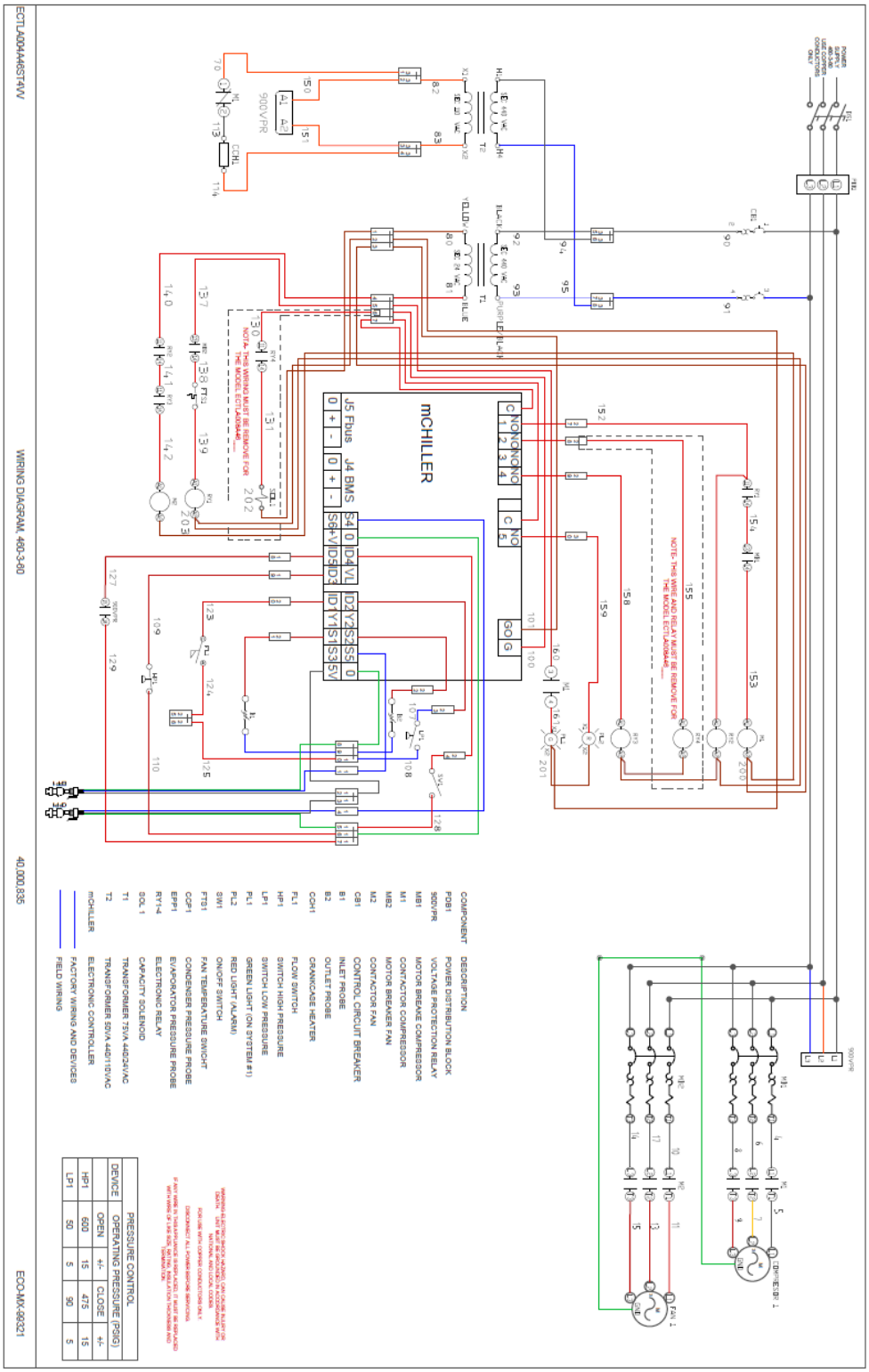

13.2 ECTLA008A25SB4VV (8 TON)

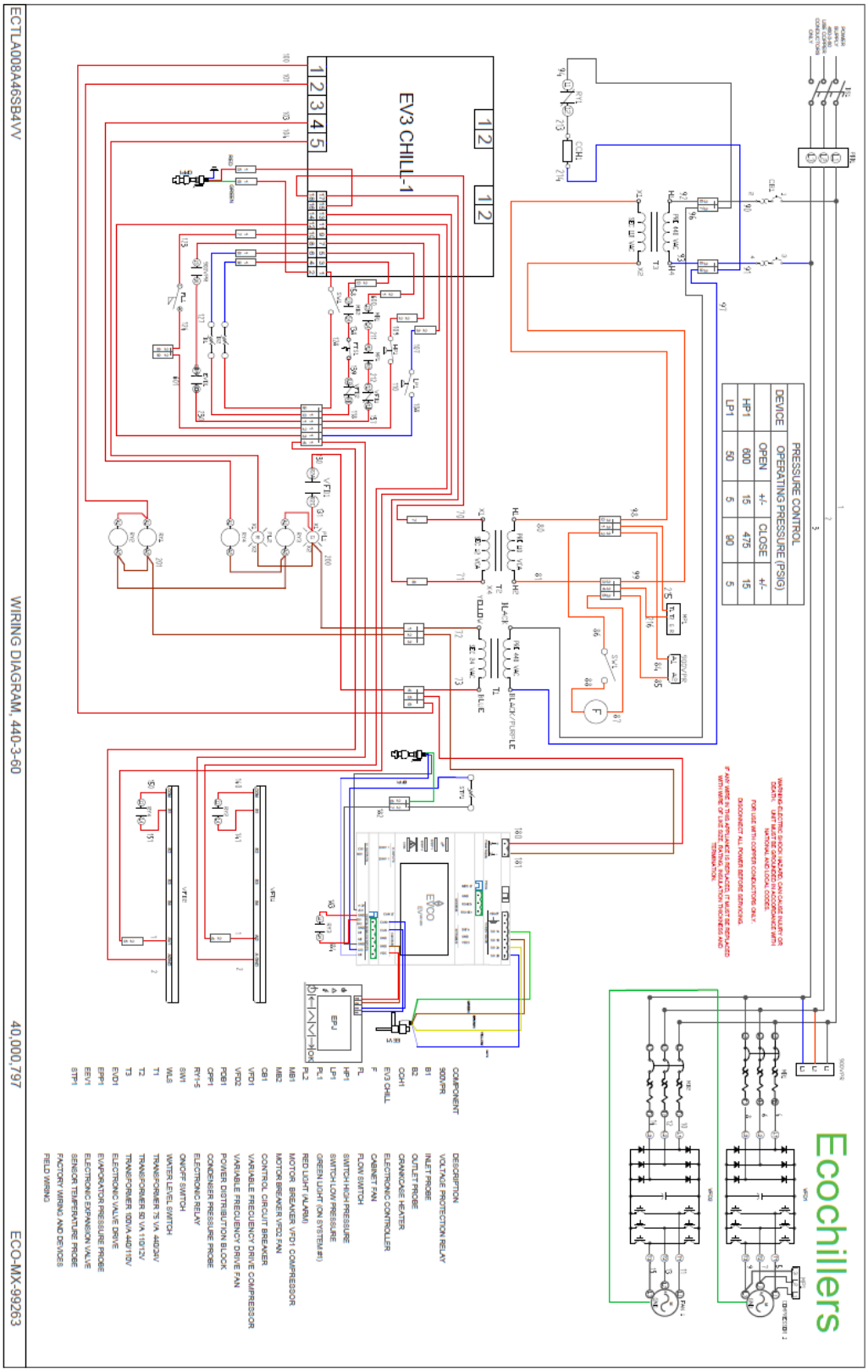

13.3 ECTLAP010A46SB4 (10 TON)(Control)

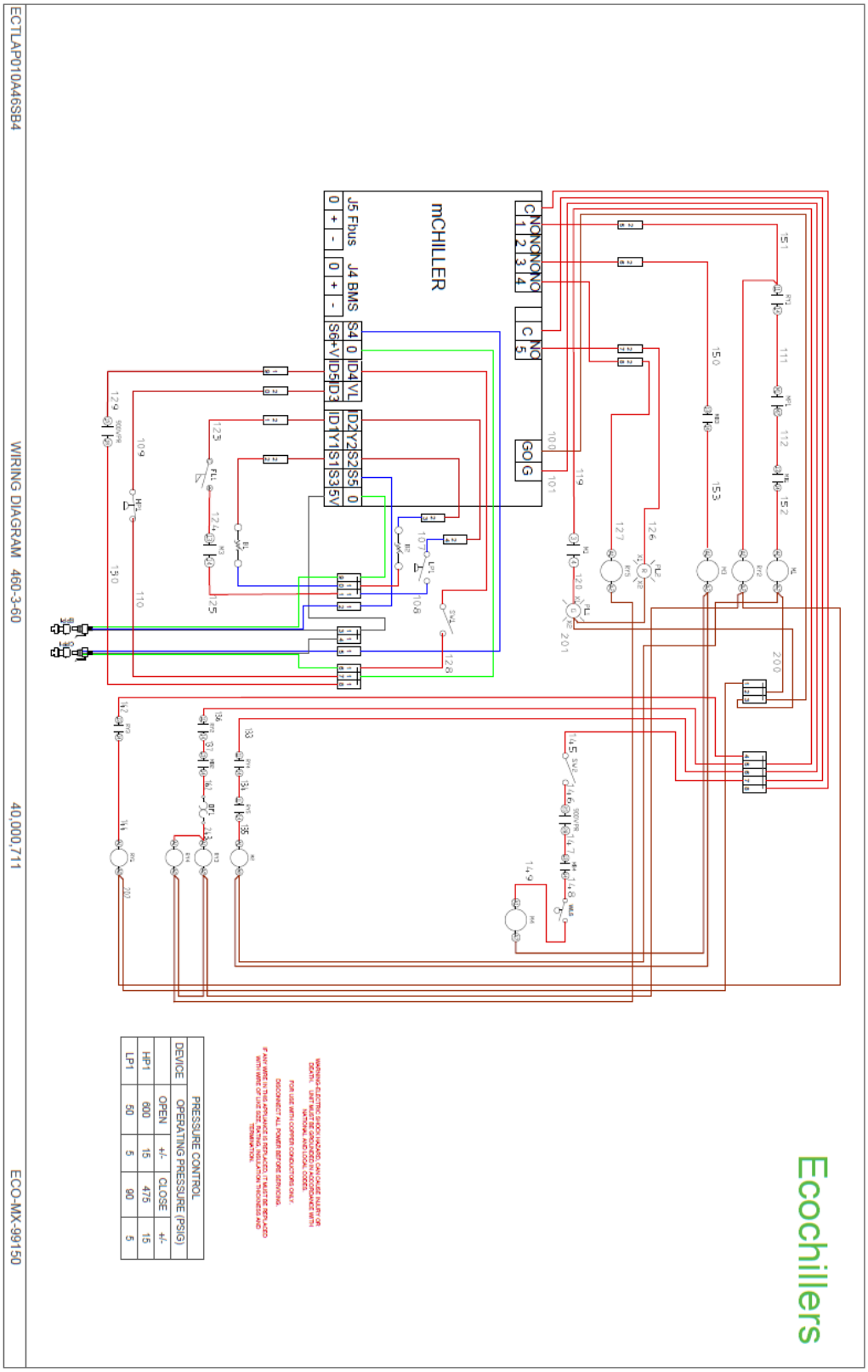

13.4 ECTLAP010A46SB4 (10 TON)(Power)

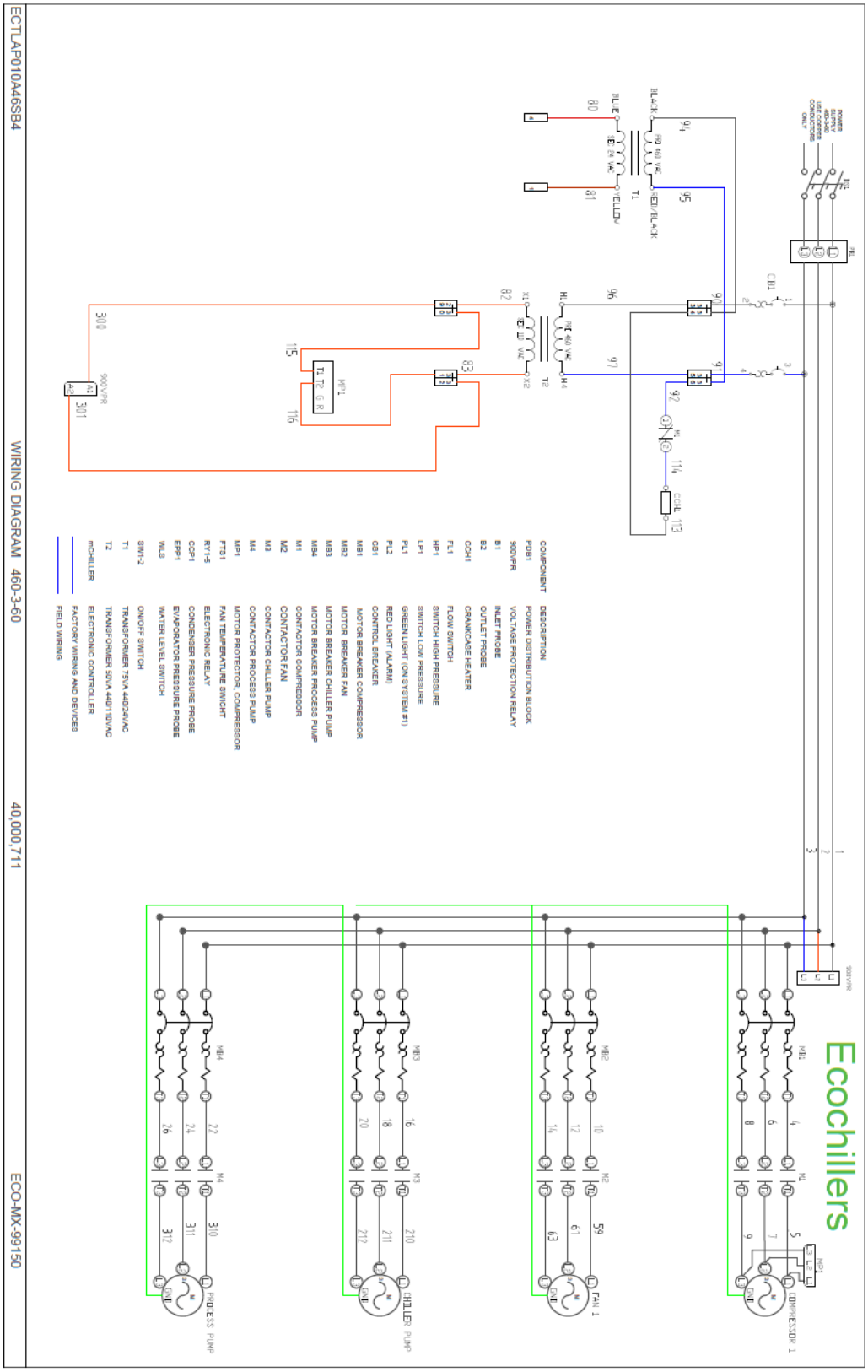

13.5 ECTLA015A25SB4VV (15 TON)(Control)

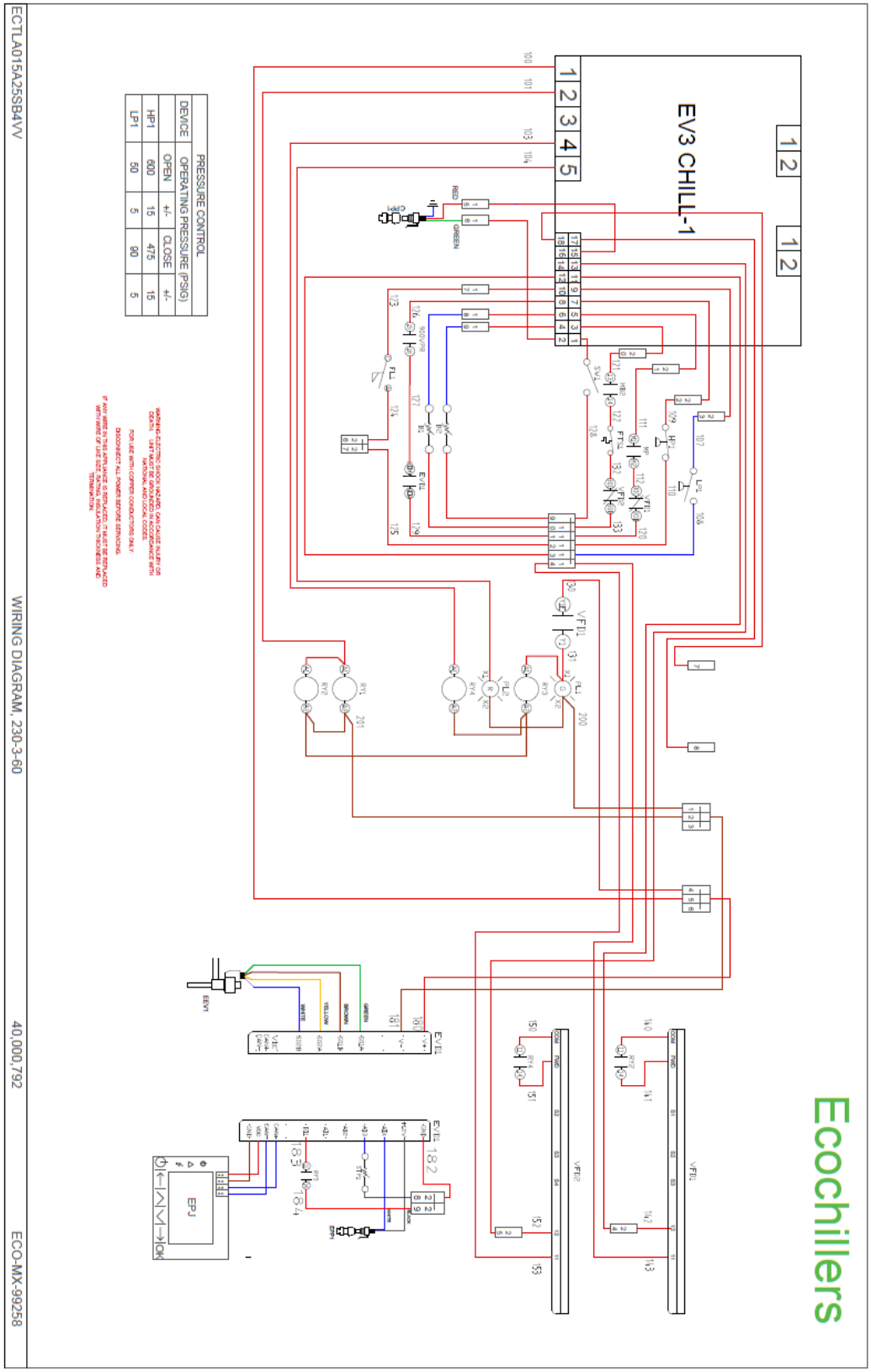

13.6 ECTLA015A25SB4VV (15 TON)(Power)

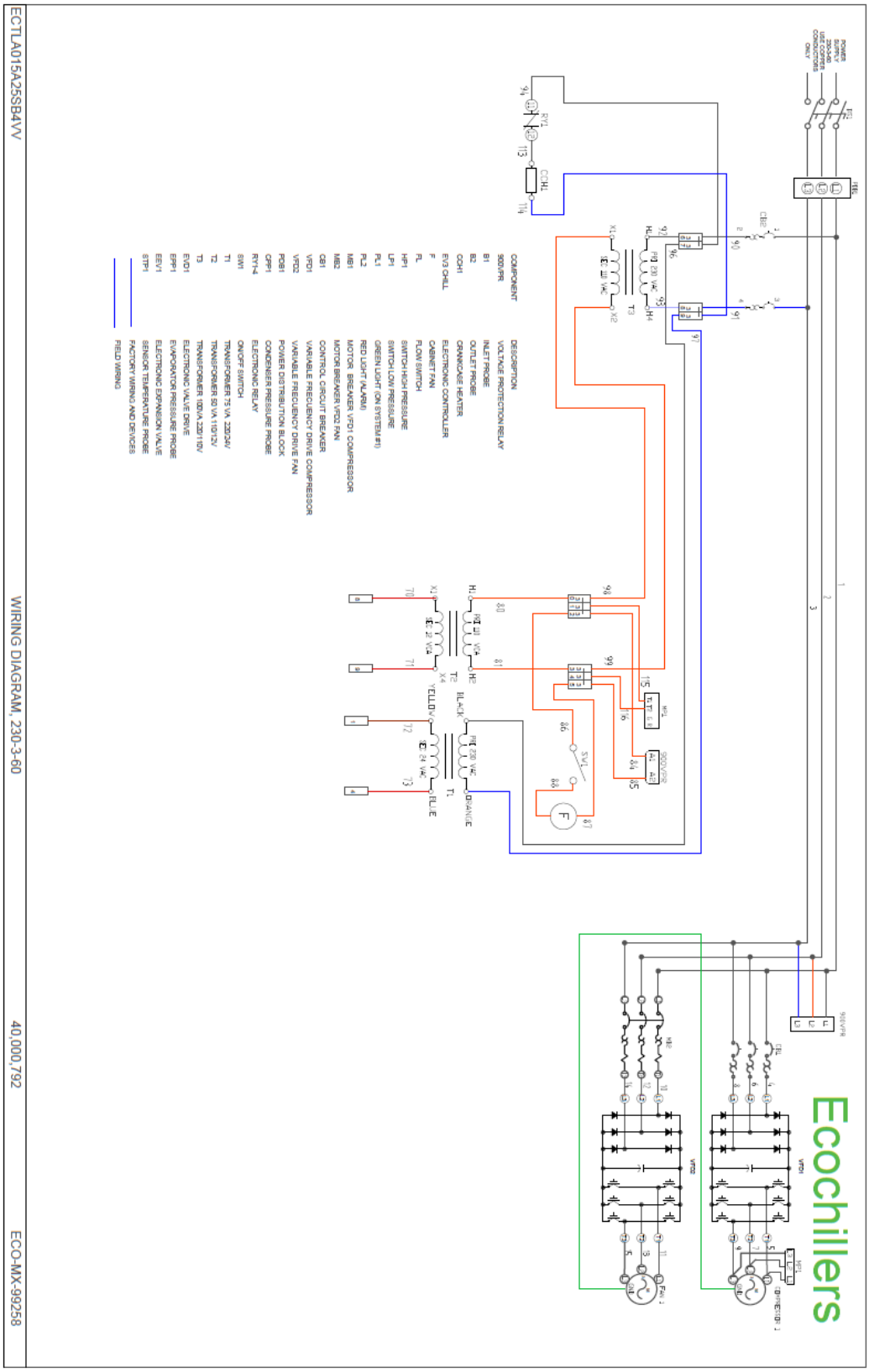

13.7 ECTLA020A46ST4VV (20 TON)(Control)

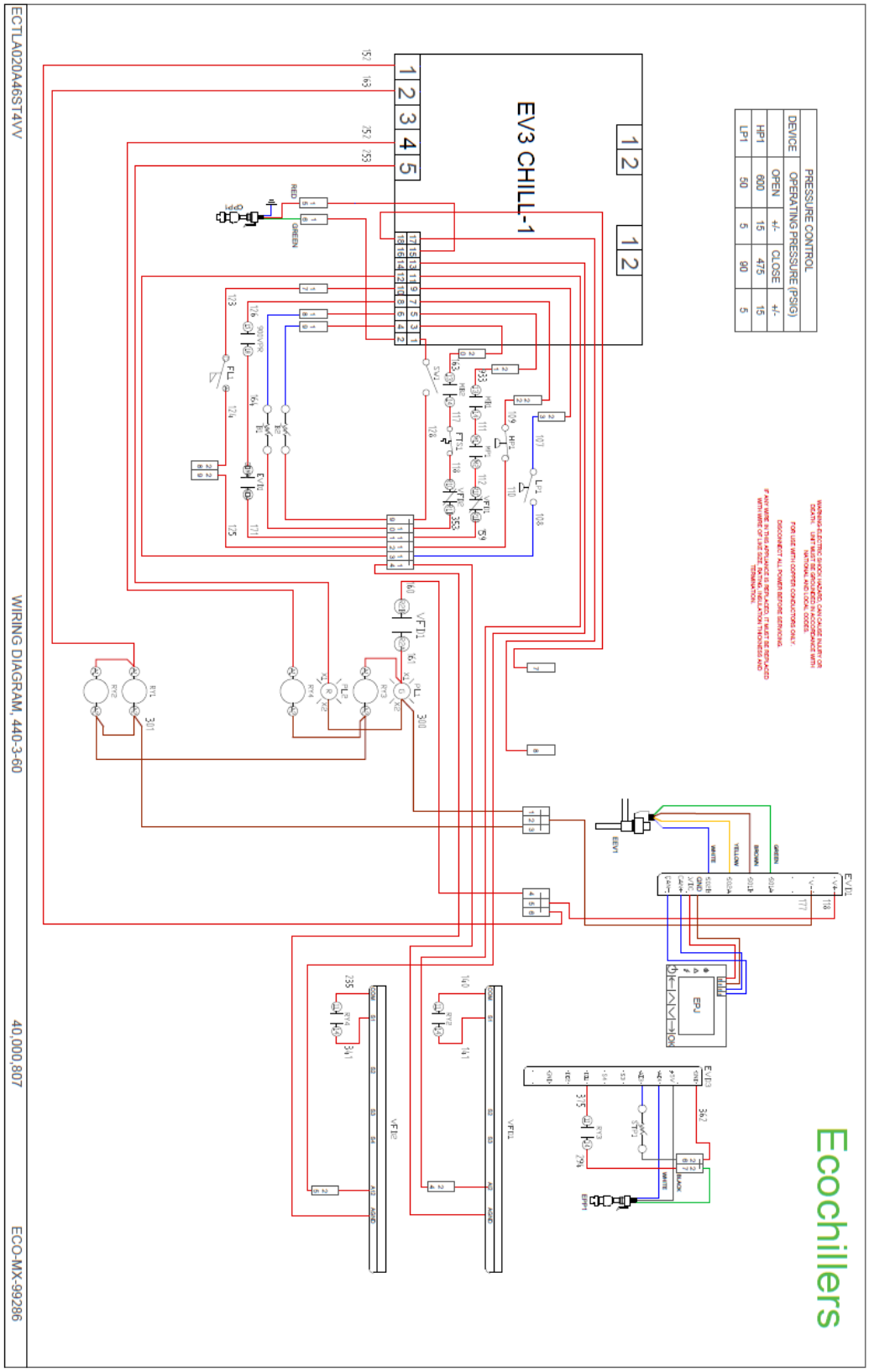

13.8 ECTLA020A46ST4VV (20 TON)(Power)

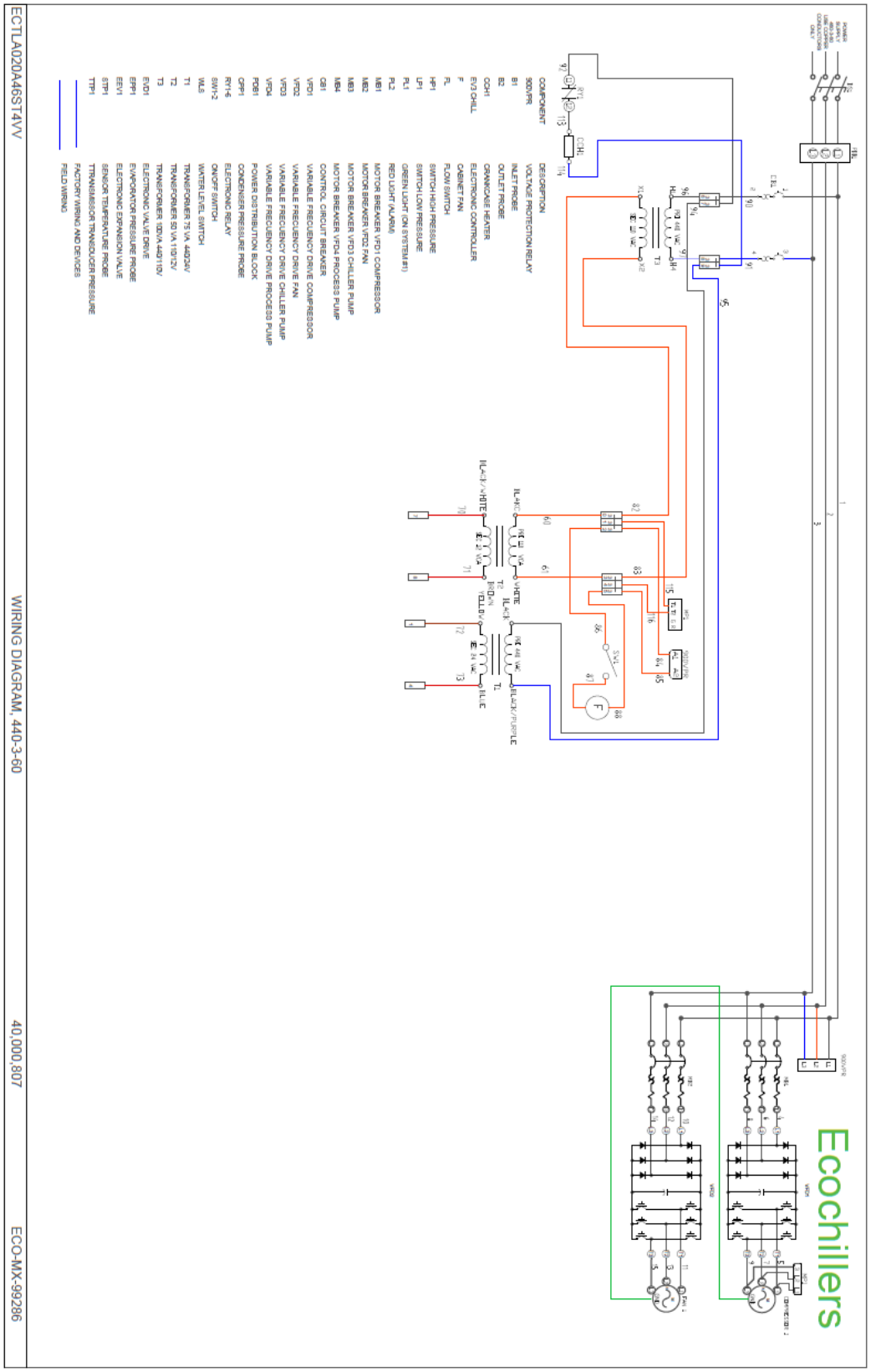

13.9 ECTLA020A46ST4VV (20 TON)(Skid Pump)

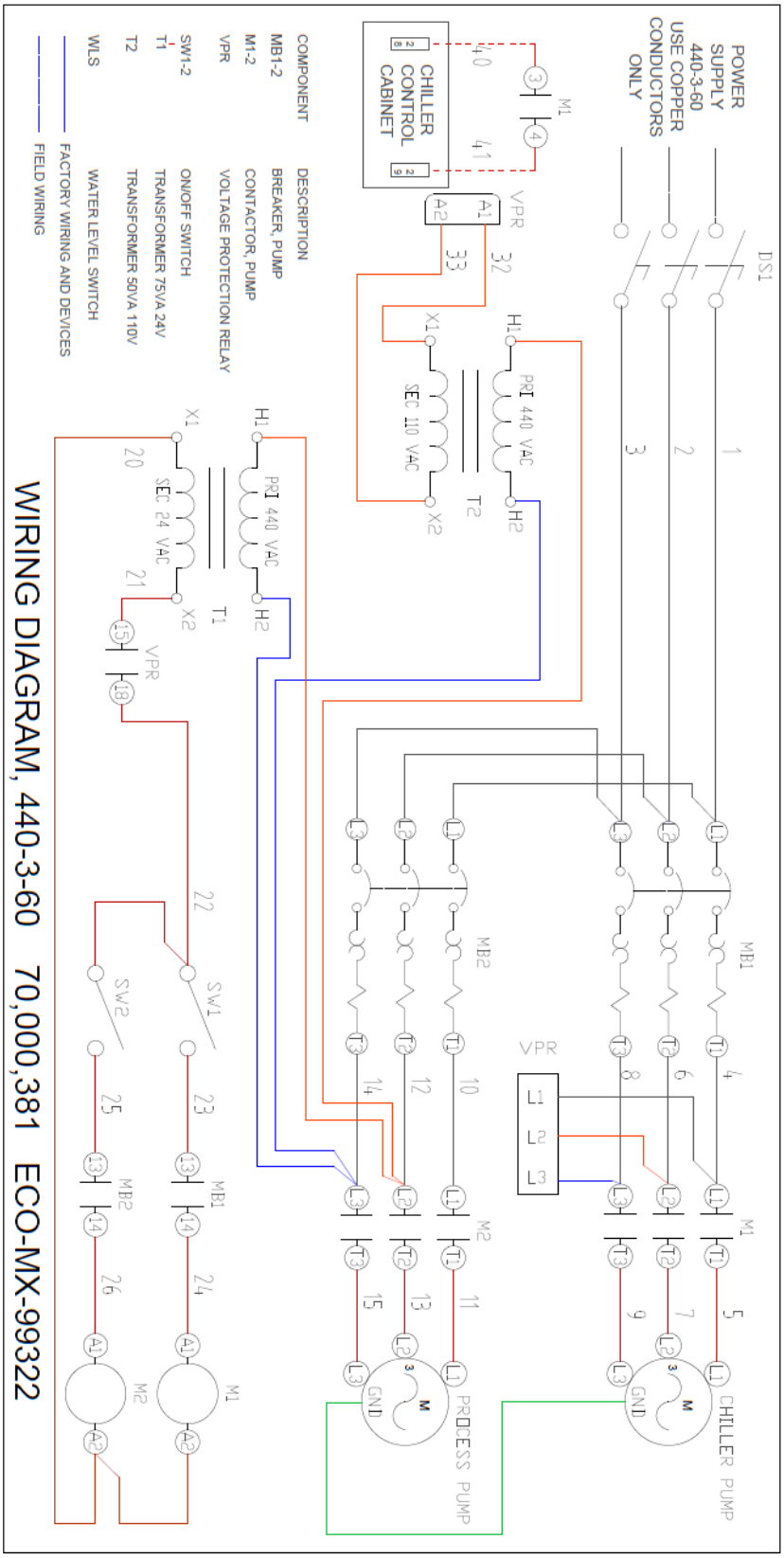

13.10 ECTLA030A46SB4 (30 ton)(Control)

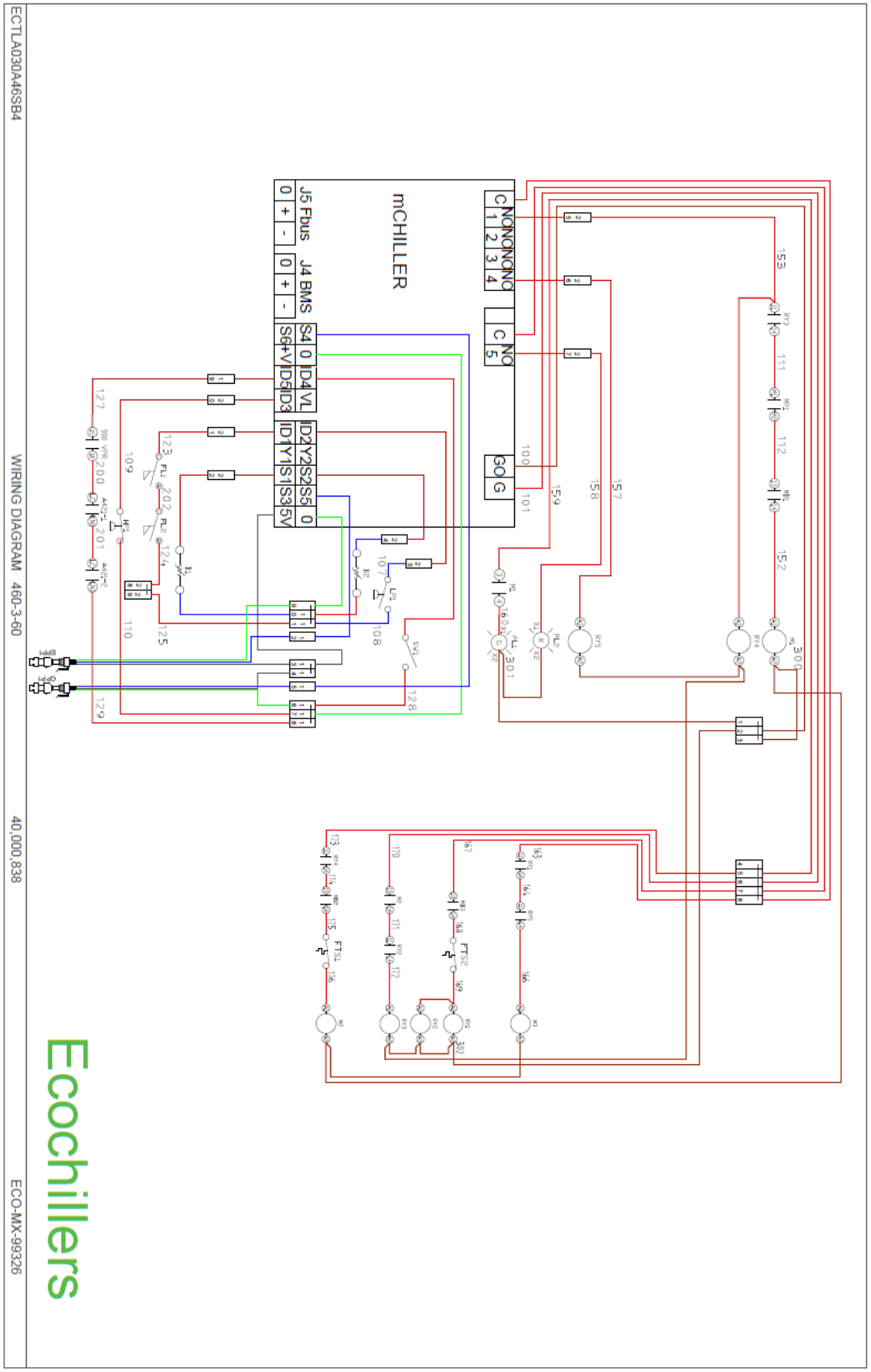

13.11 ECTLA030A46SB4 (30 TON)(Power)

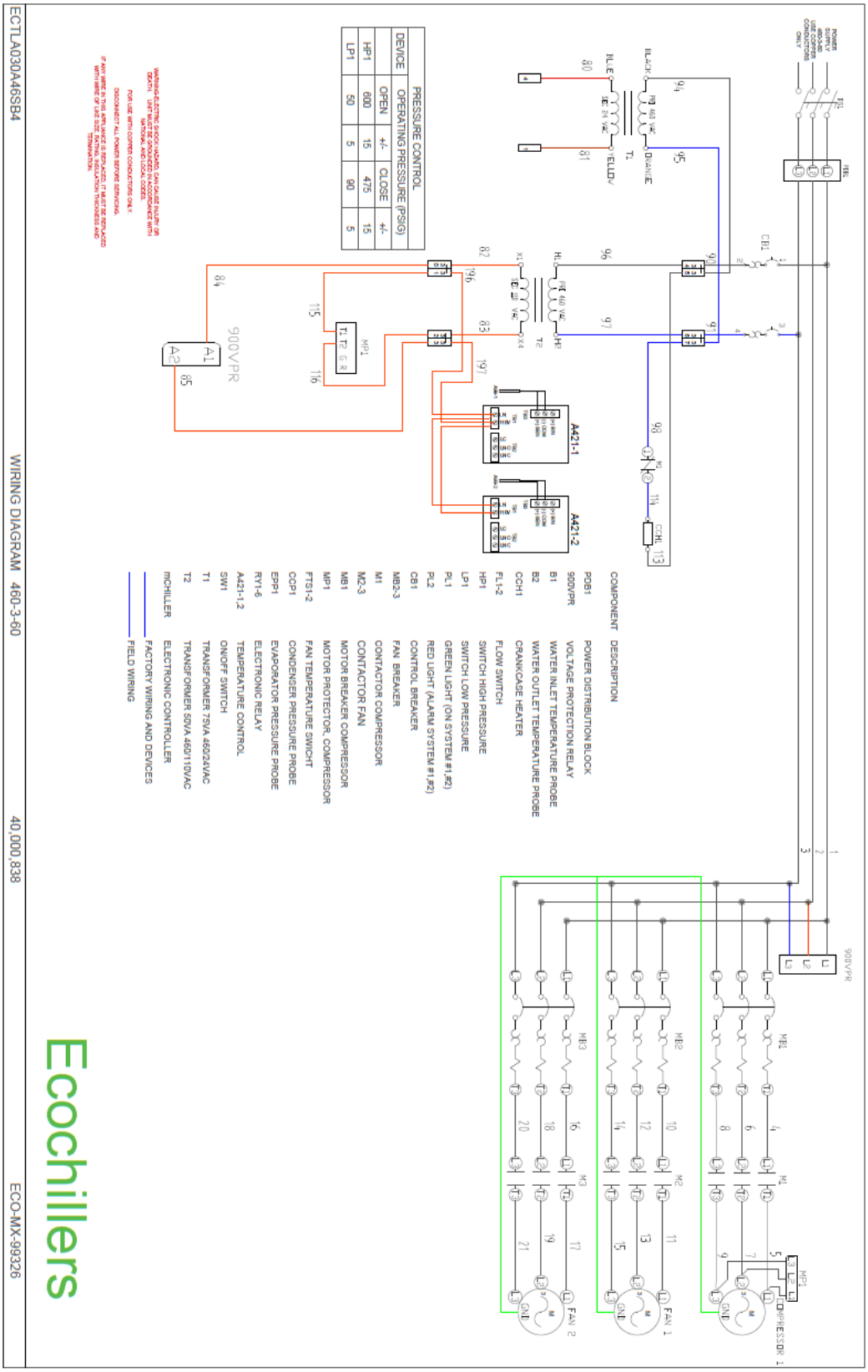

13.12 ECTLAP040A46SB4VV (40 TON)(Control)

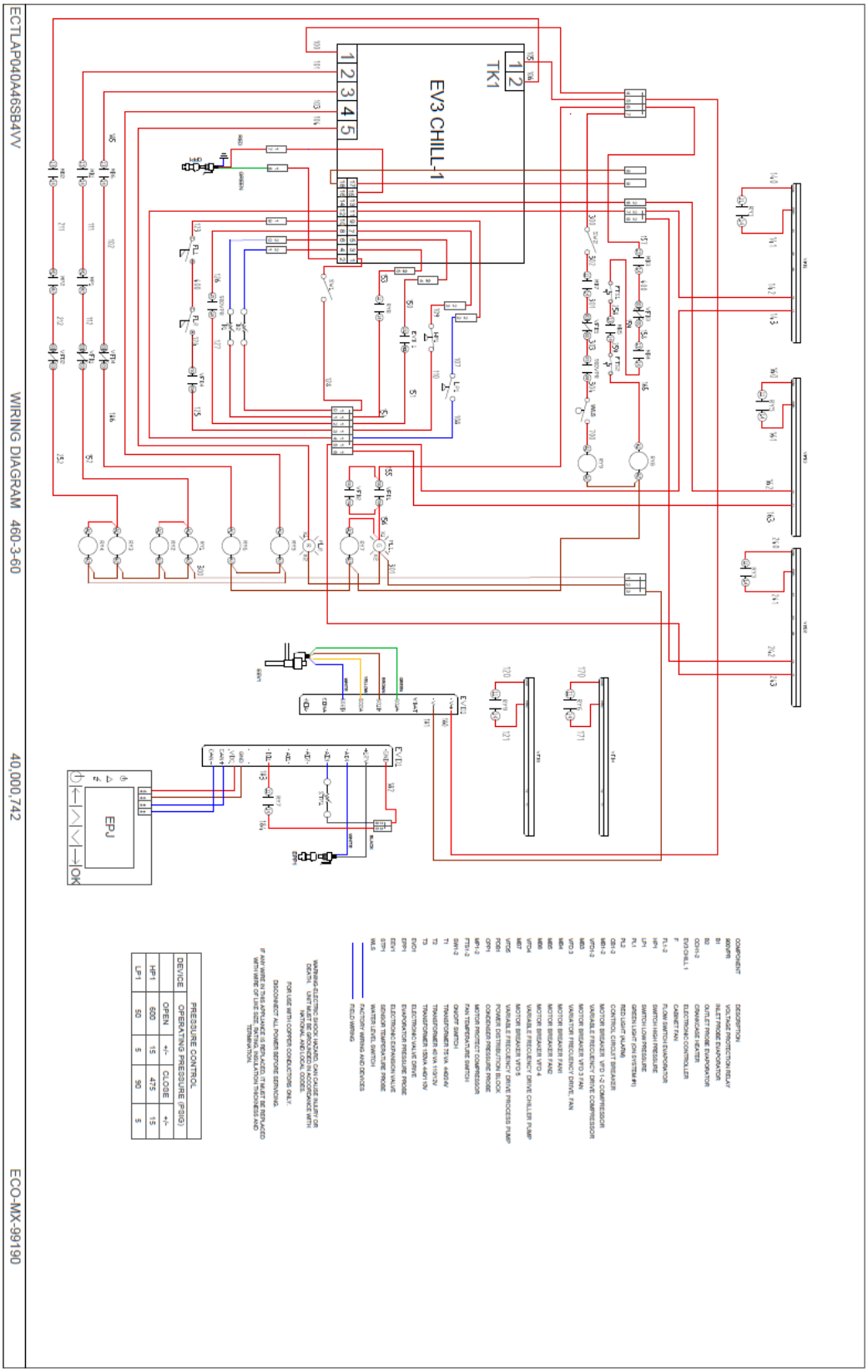

13.13 ECTLAP040A46SB4VV (40 TON)(Power)

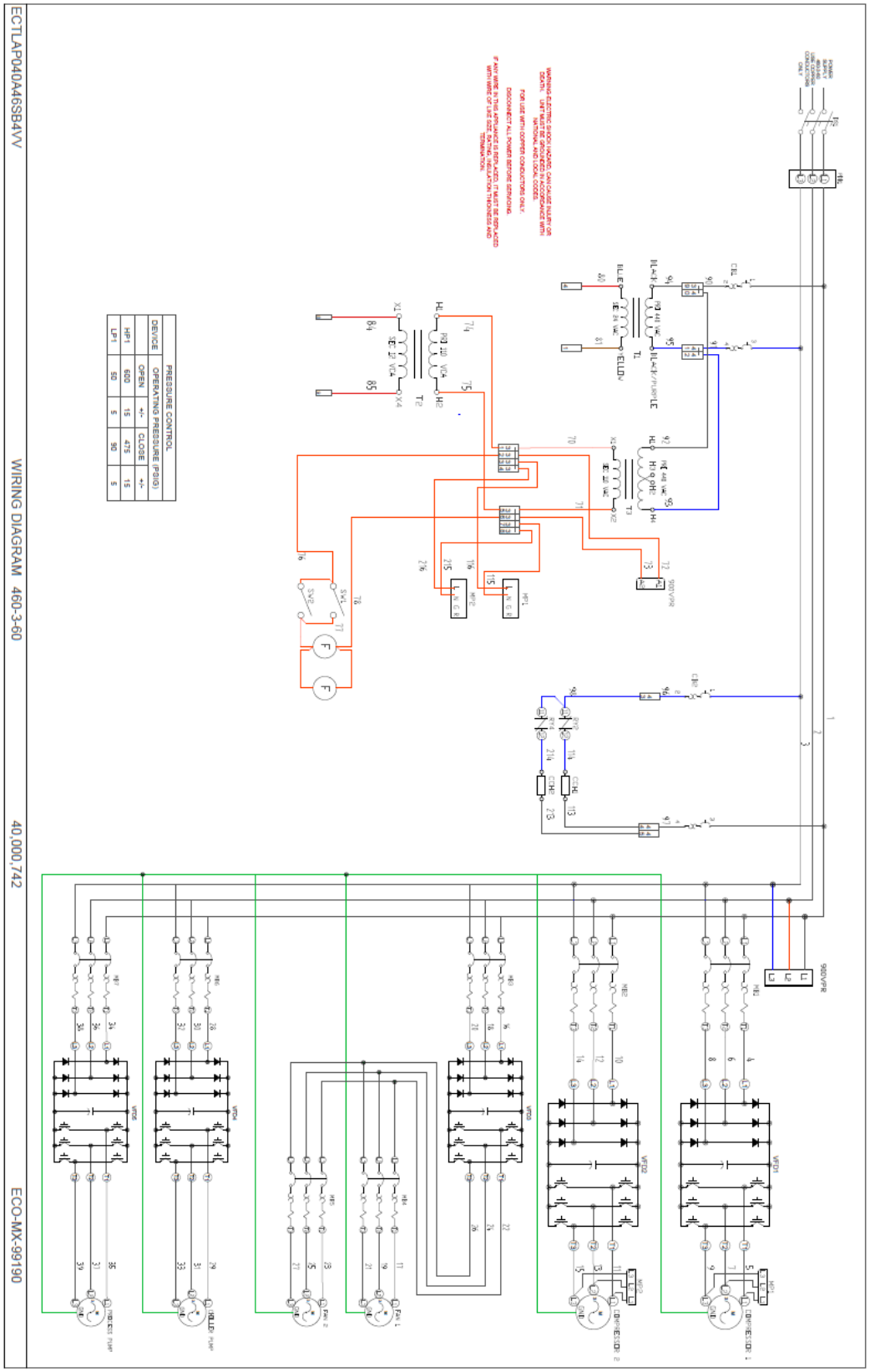

13.14 ECTLA050A25ST4VV (50 TON)(Control)

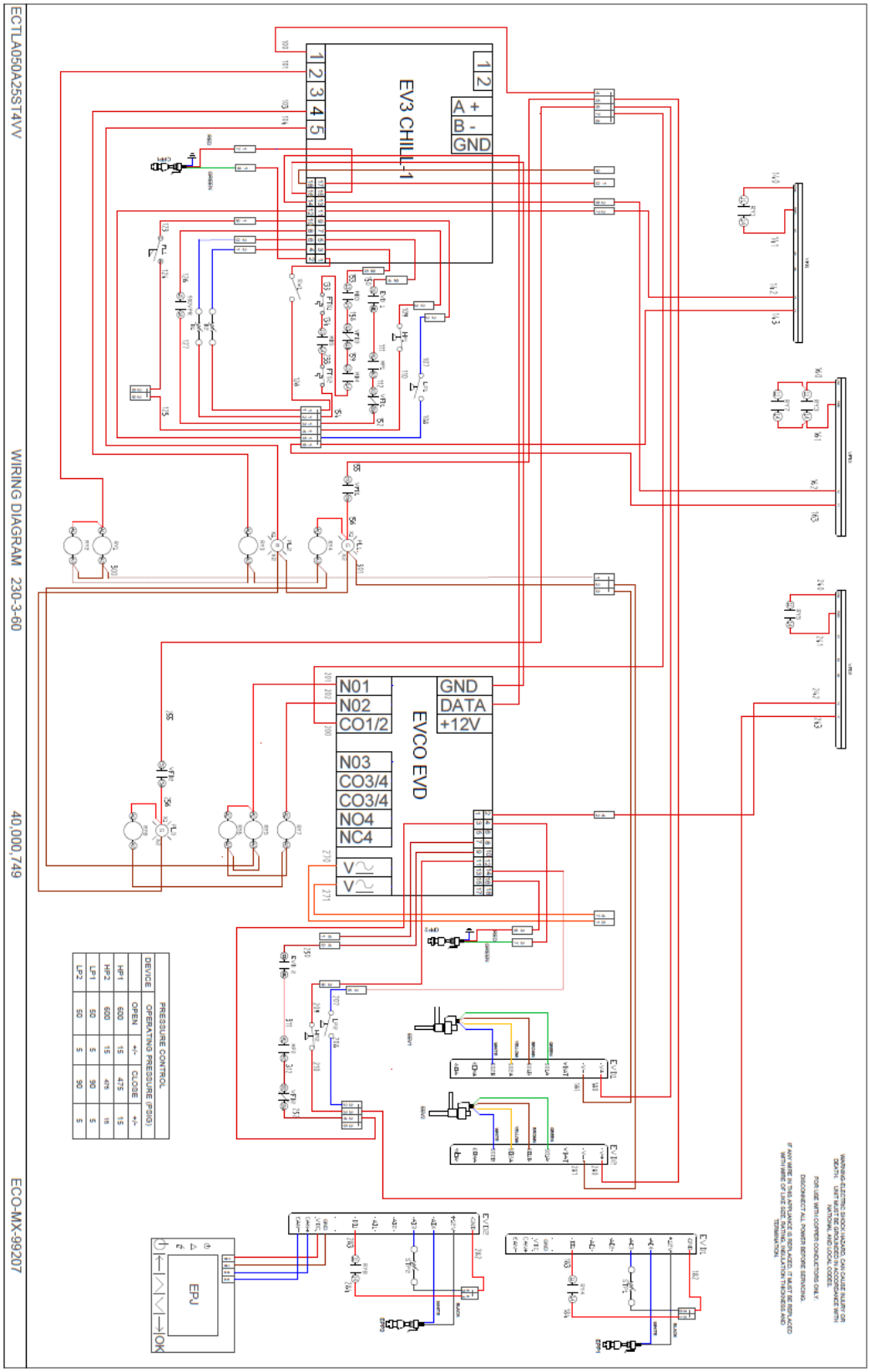

13.15 ECTLA050A25ST4VV (50 TON)(Power)

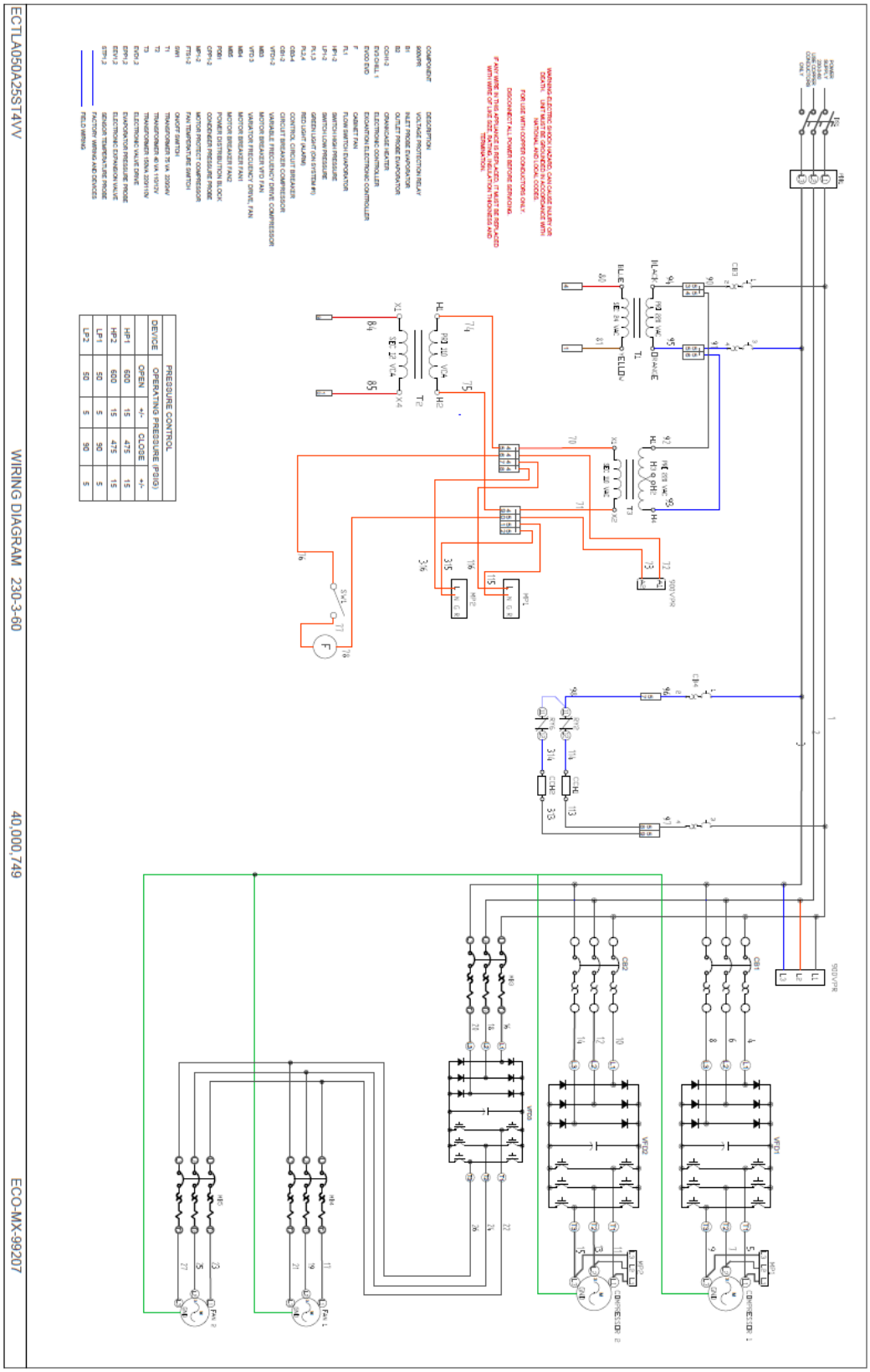

13.16 ECTLA050A25ST4VV (50 TON)(Skid Pump)

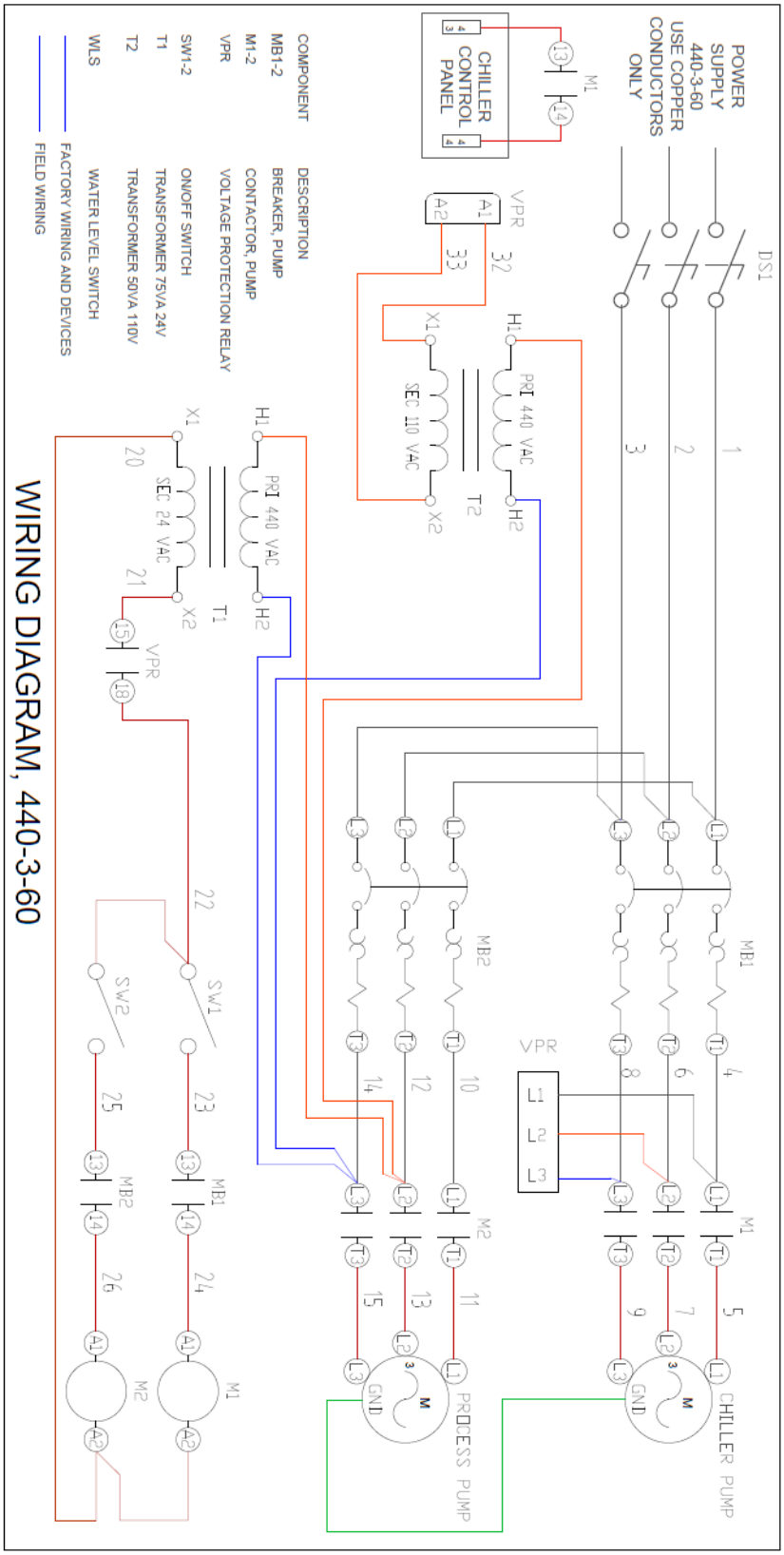

13.17 ECTLA070A46ST4VV (70 TON)(Control)

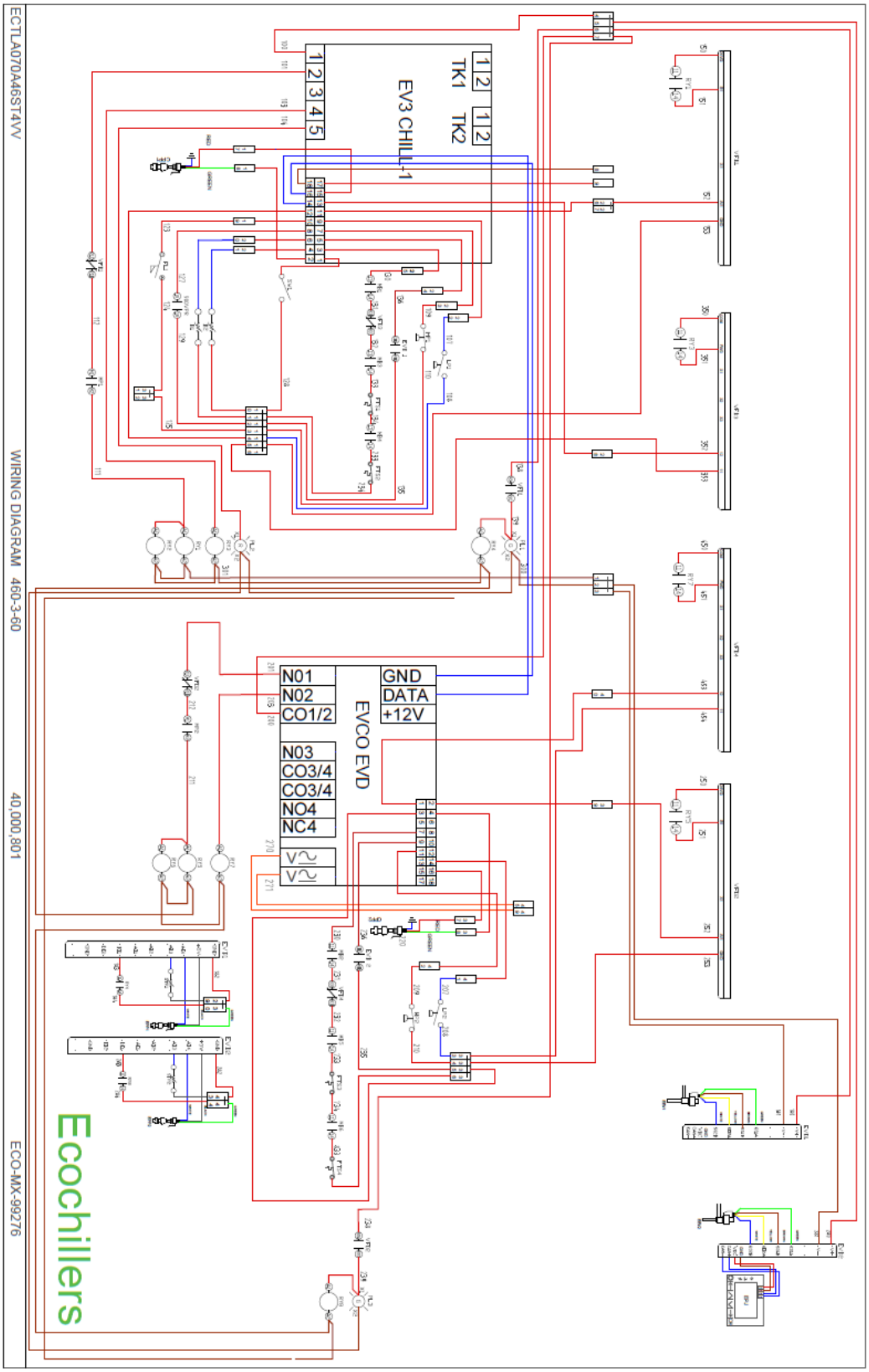

13.18 ECTLA70A46ST4VV (70 TON)(Power)

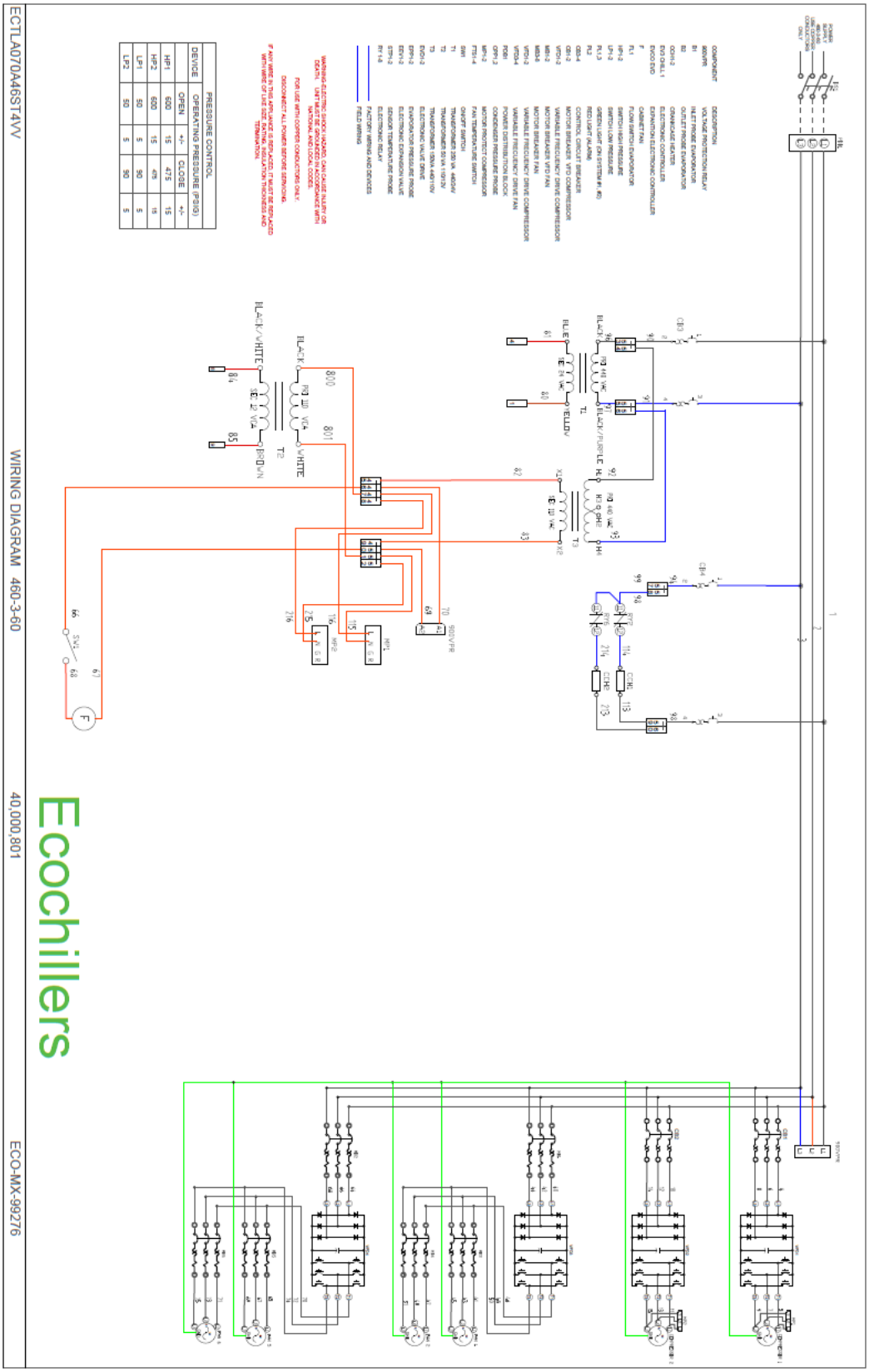

13.19 ECT080A46ST4 (80 TON)(Control)

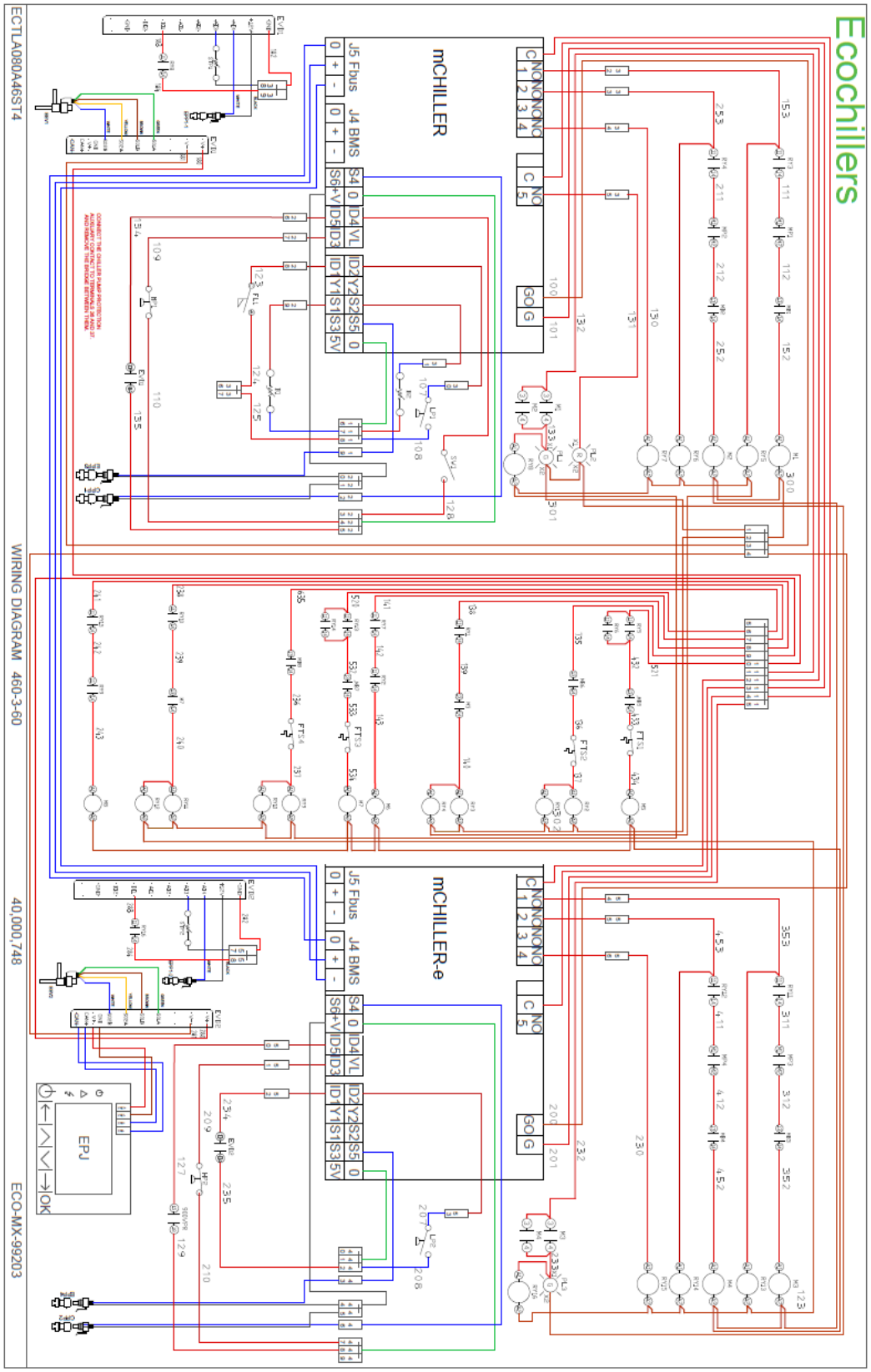

13.20 ECT080A46ST4 (80 TON)(Power)

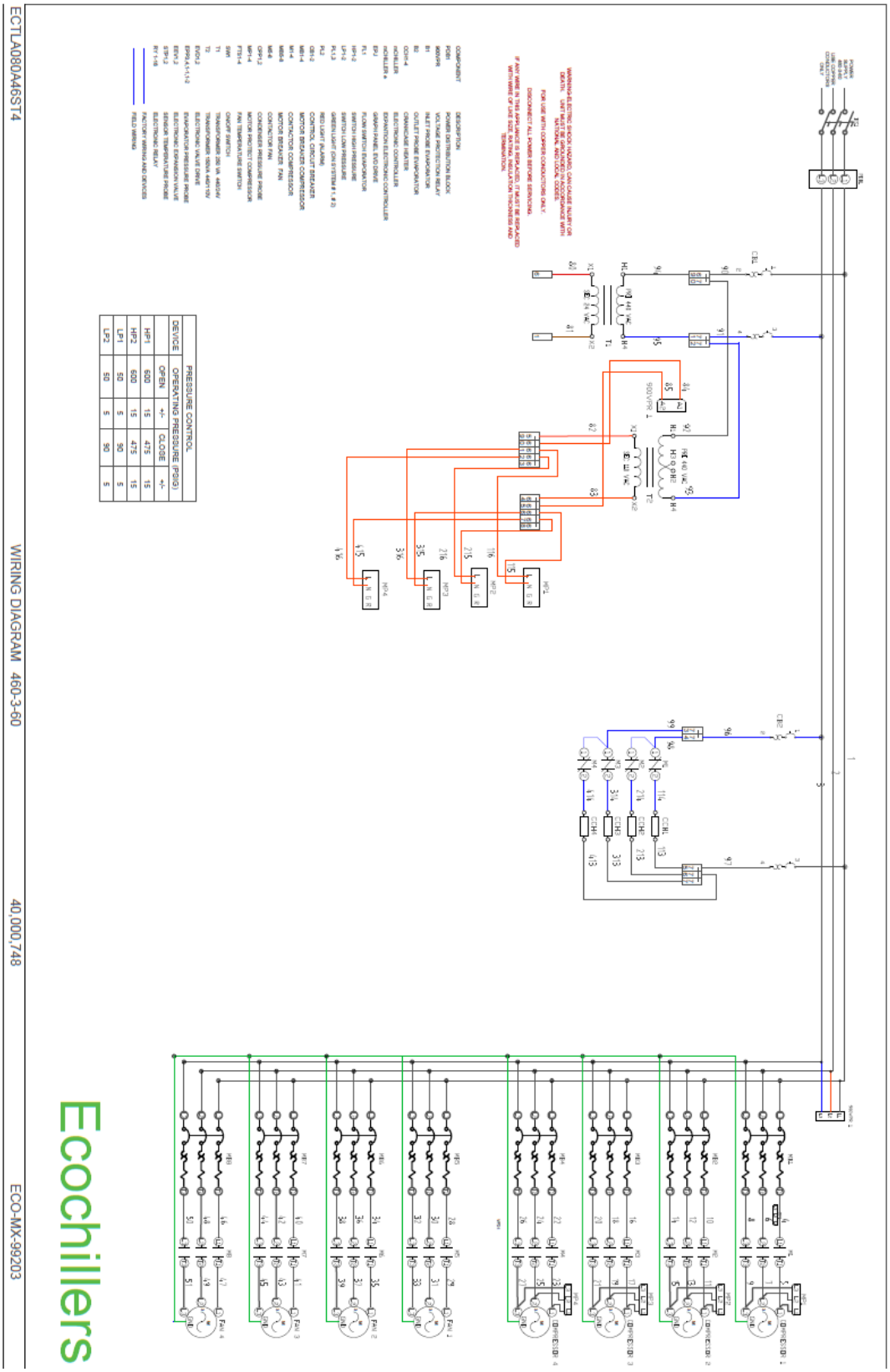

13.21 ECT080A46ST4 (80 TON)(Skid Pump)

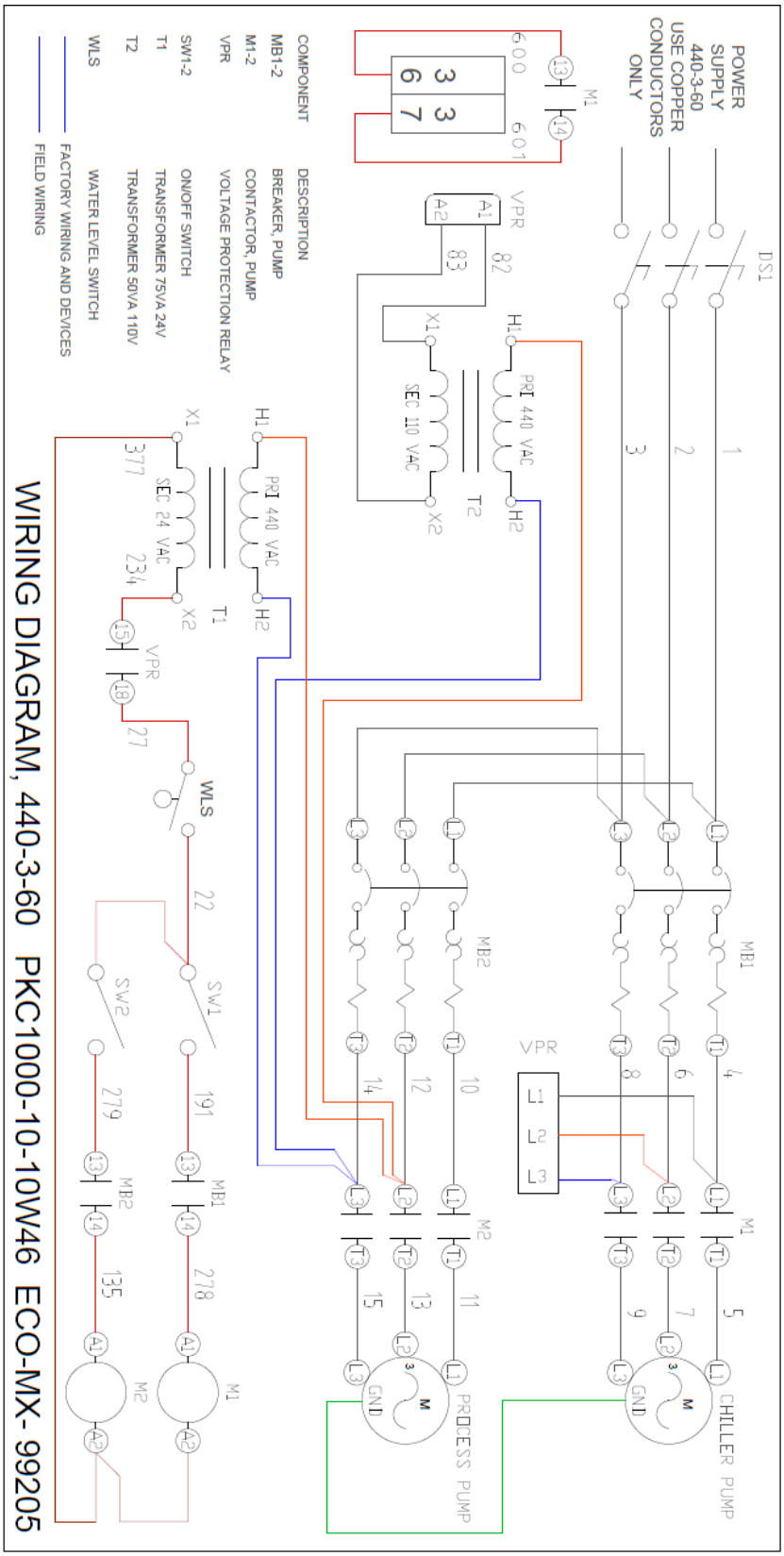

13.22 ECT105A46SB4VV (105 TON)(Control)

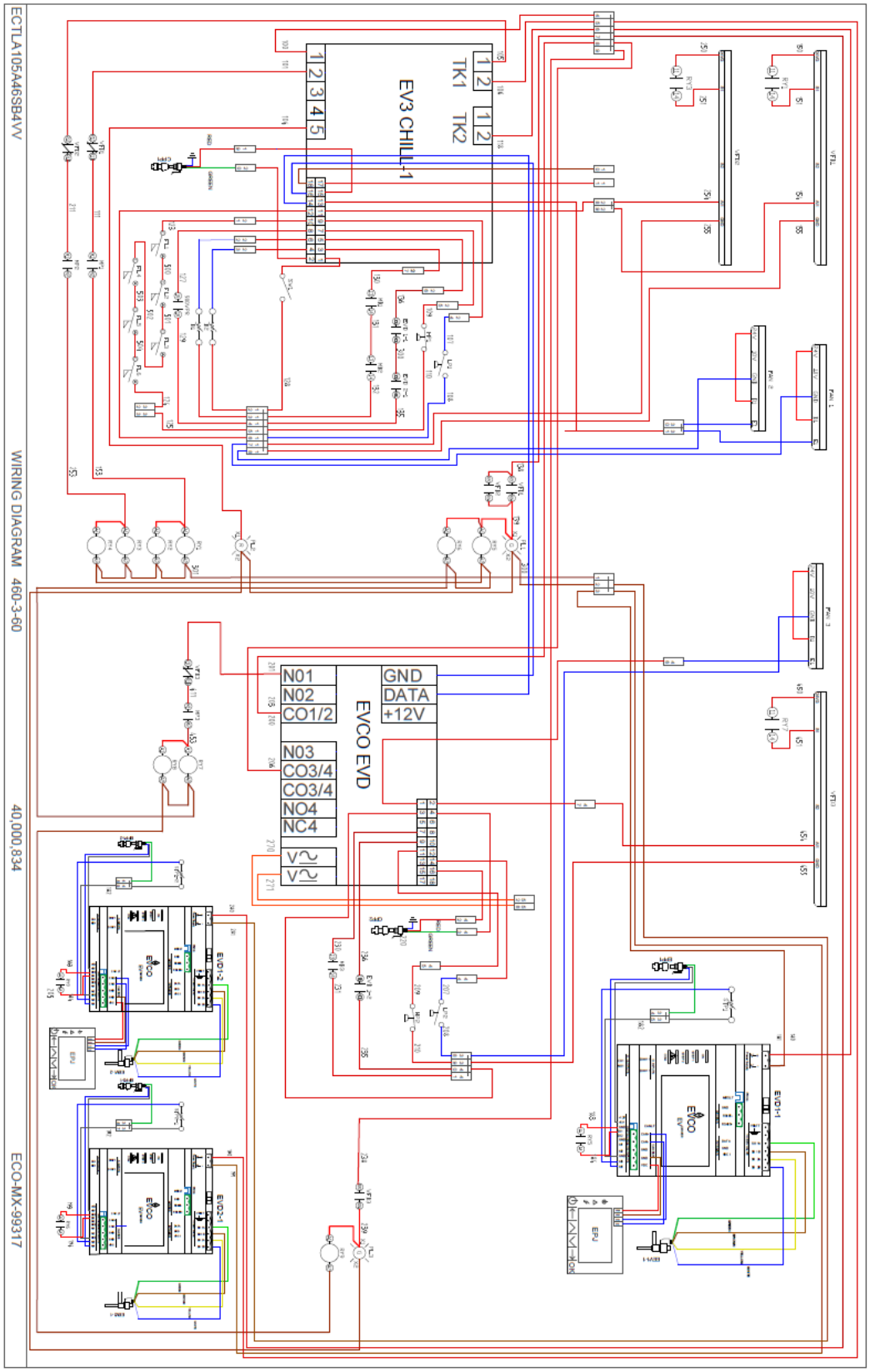

13.23 ECT105A46SB4VV (105 TON)(Power)

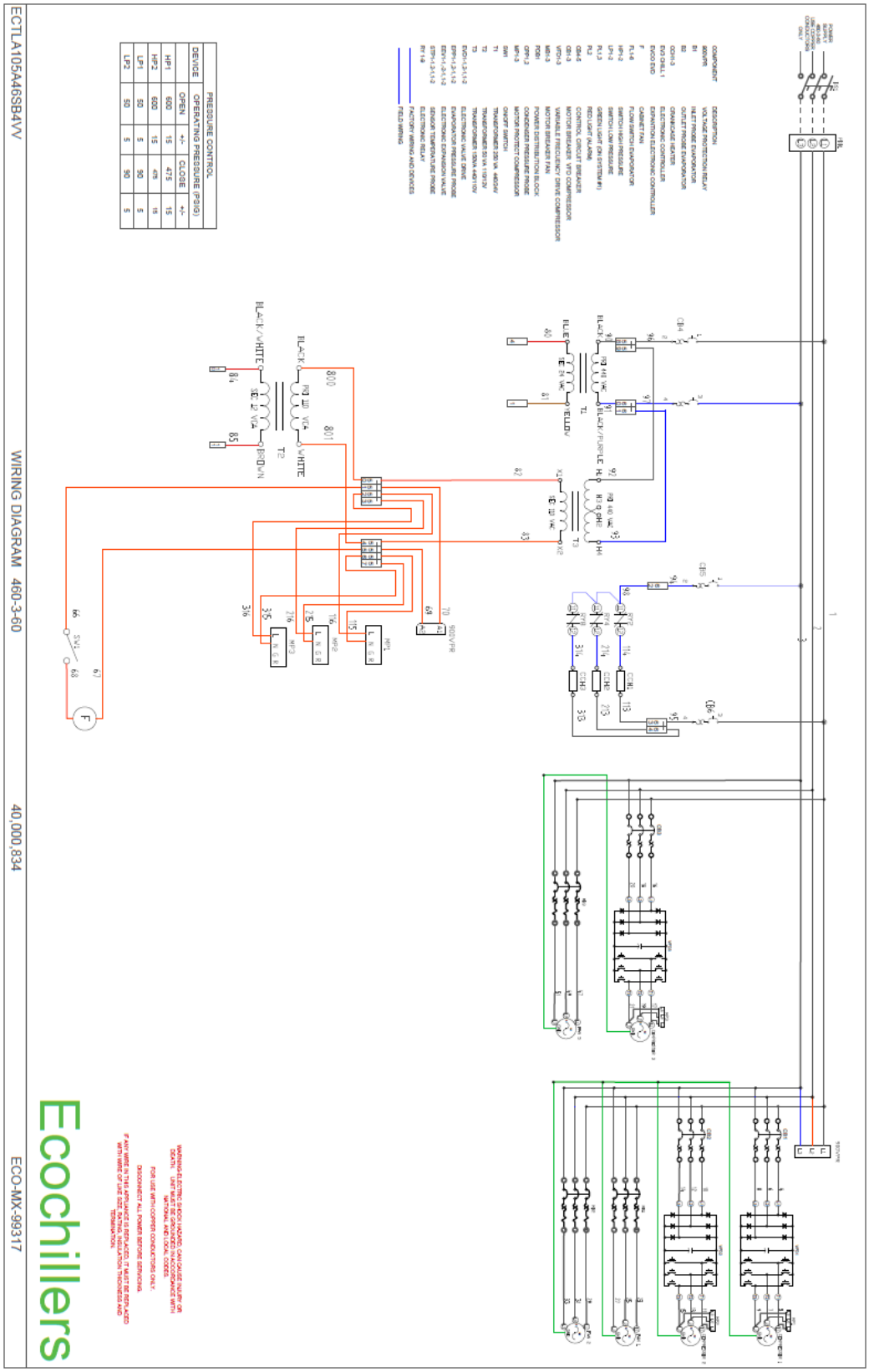

13.24 ECT120A46ST4 (120 TON)(Control)

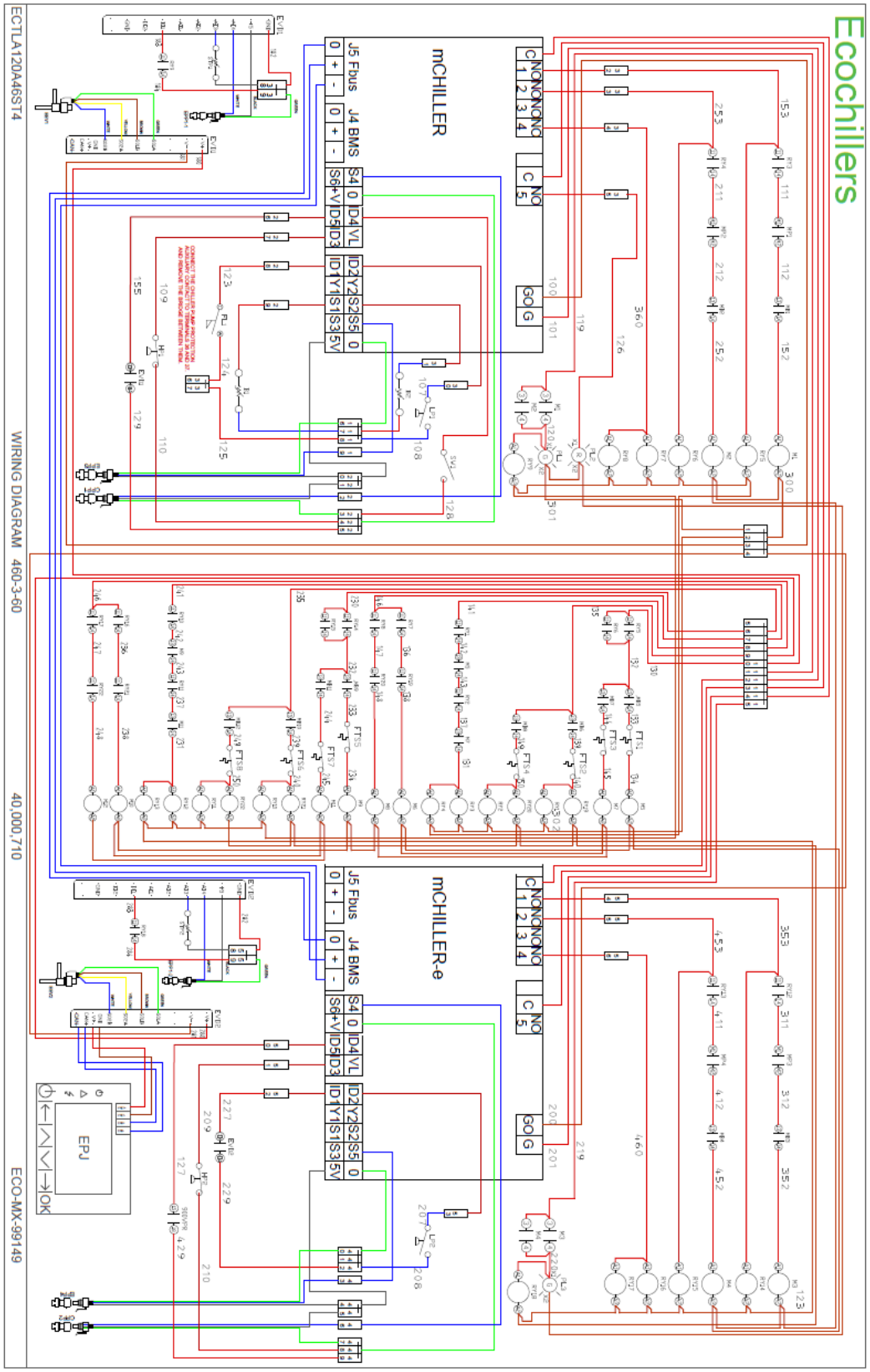

13.25 ECT120A46ST4 (120 TON)(Power)

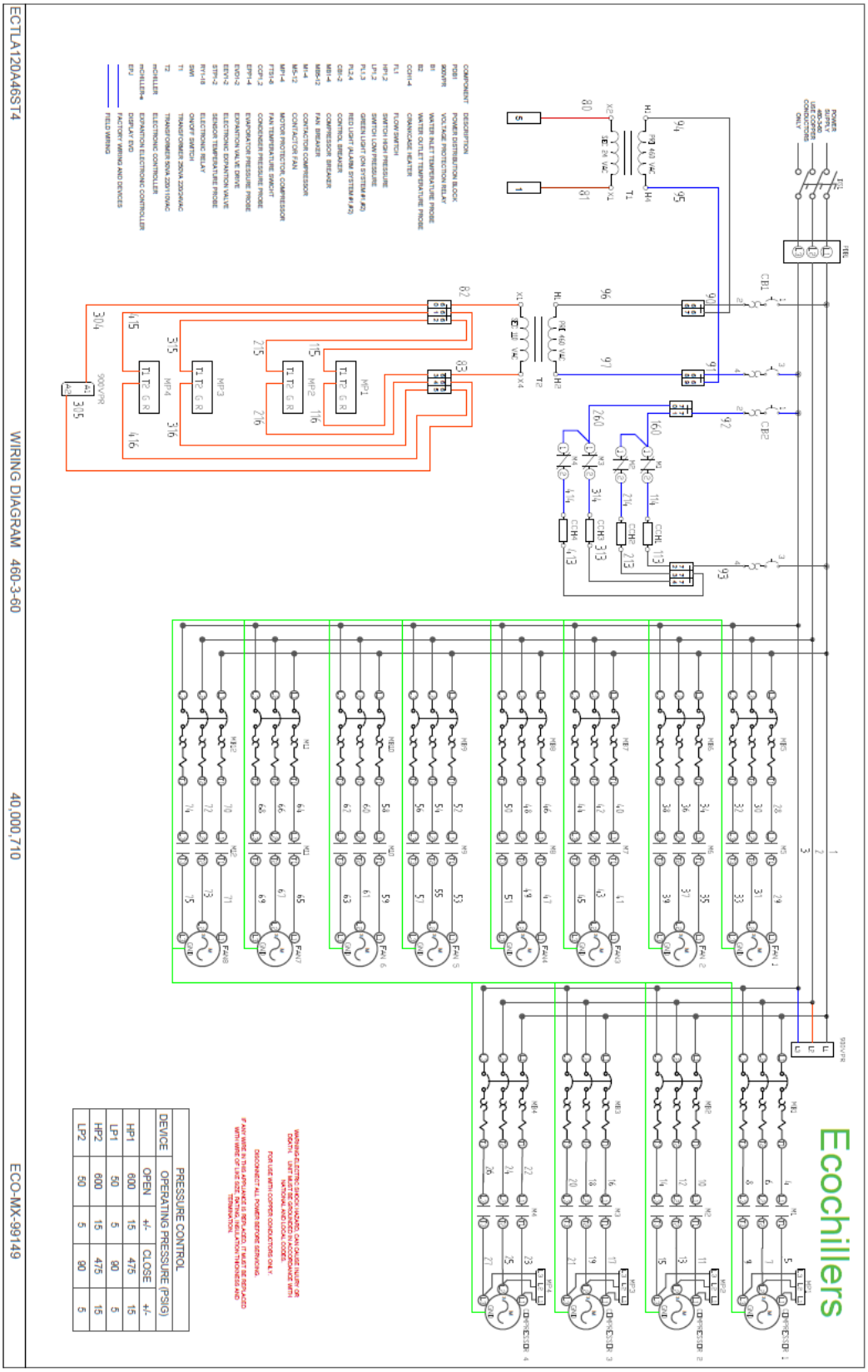

13.26 ECT140A38ST4VV (140 TON)(Power)

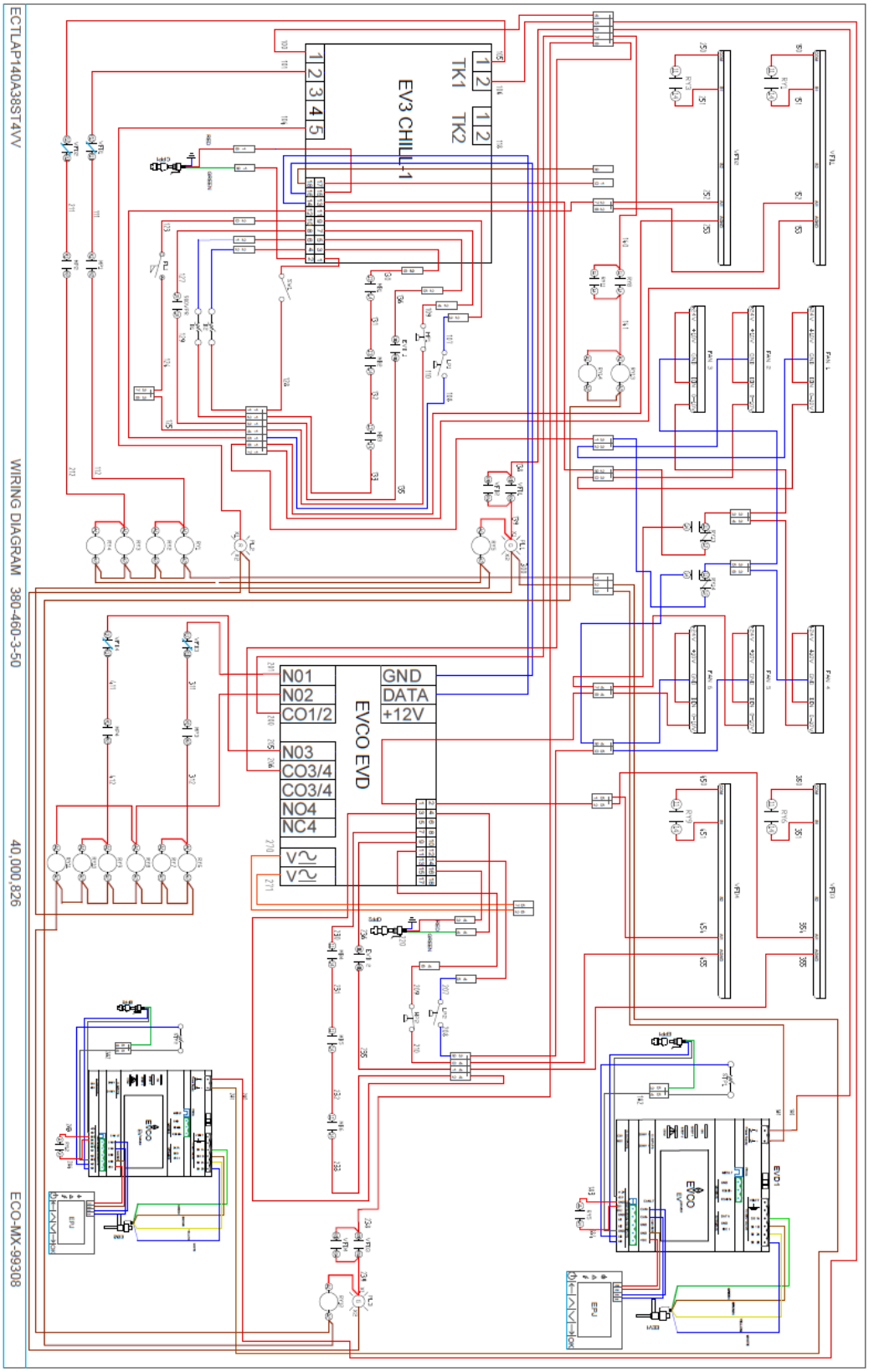

13.27 ECT140A38ST4VV (140 TON)(Power)

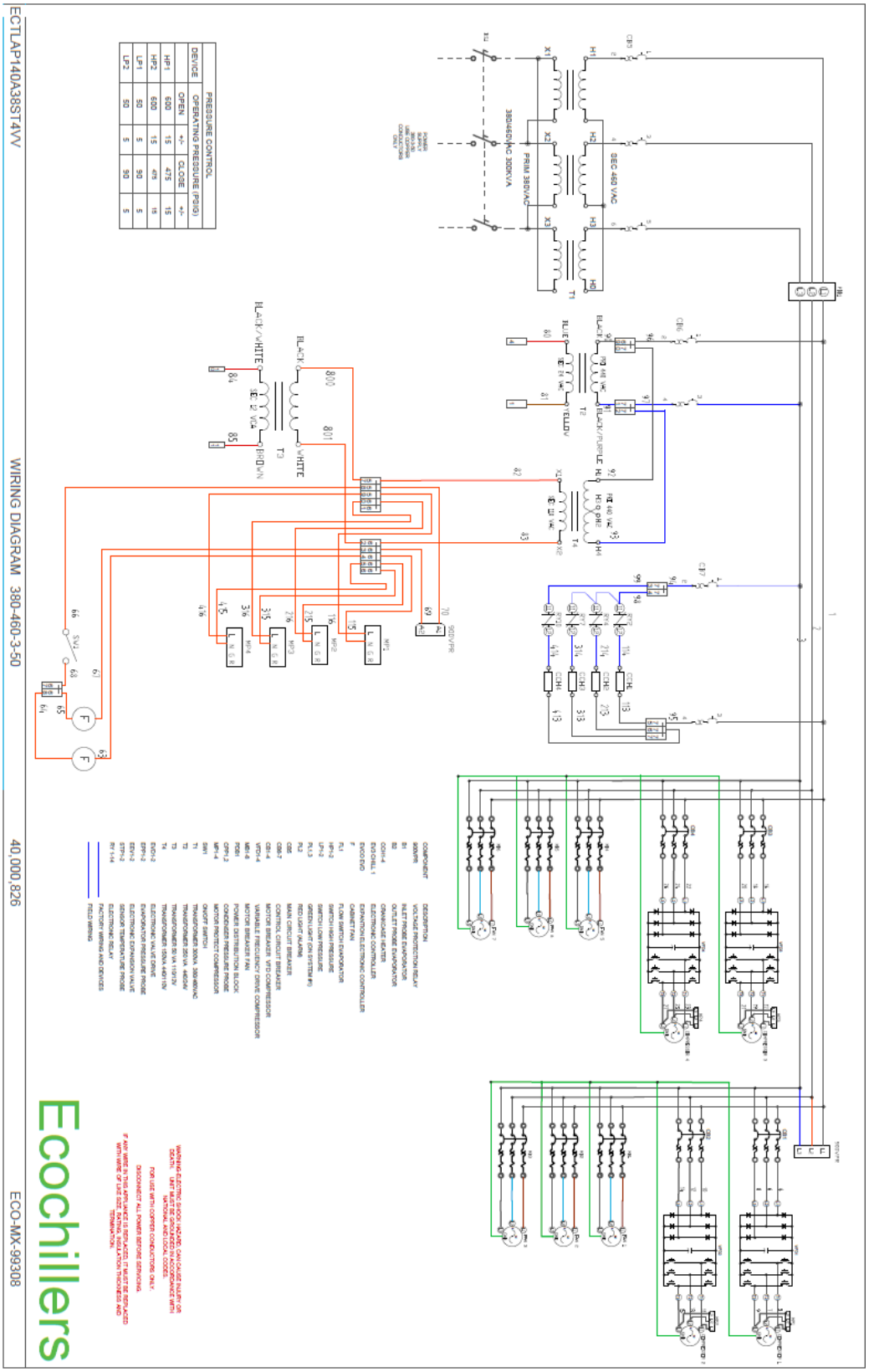

13.28 ECT175A46ST4VV (175 TON)(Control)

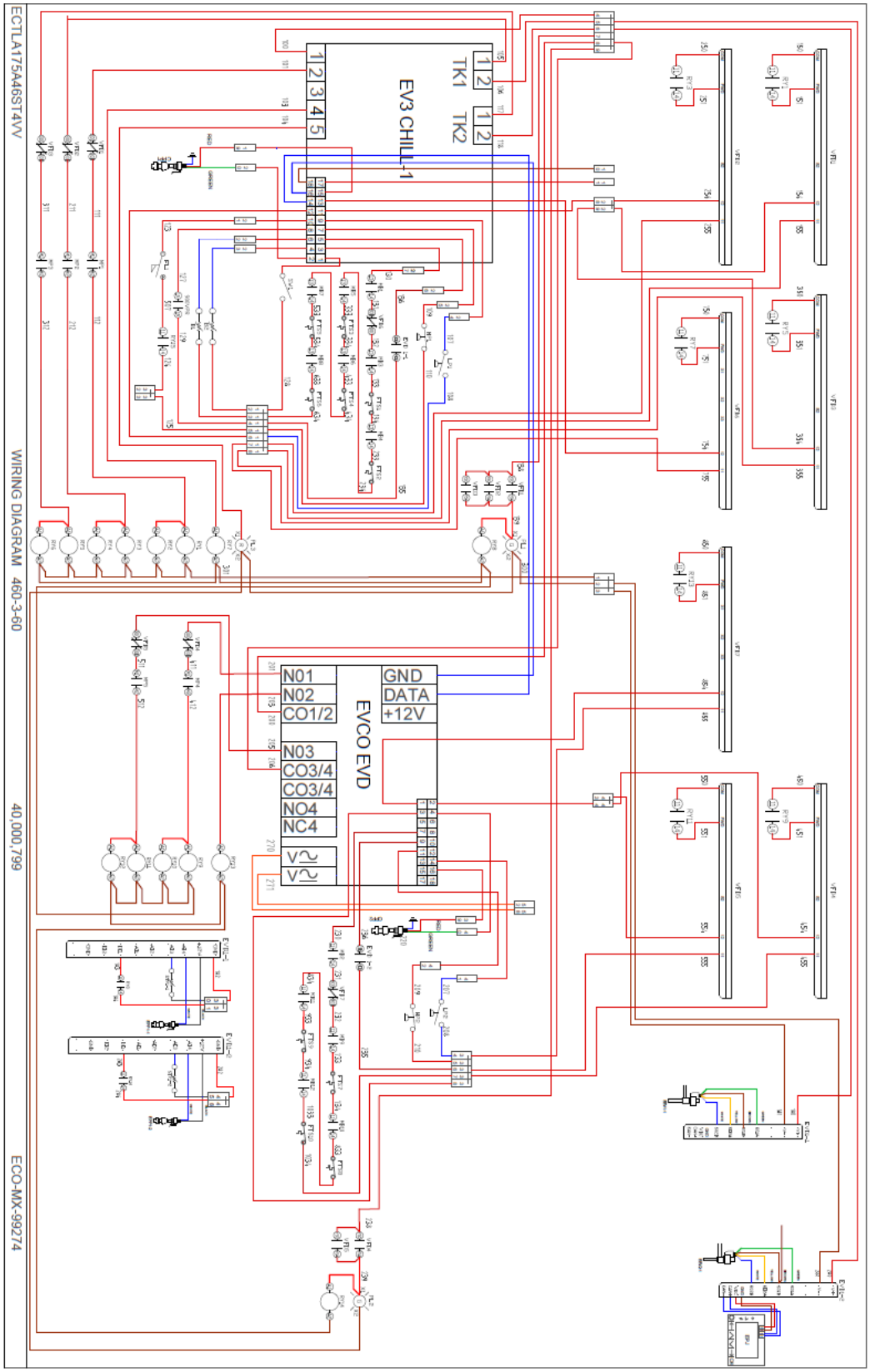

13.29 ECT175A46ST4VV (175 TON)(Power)

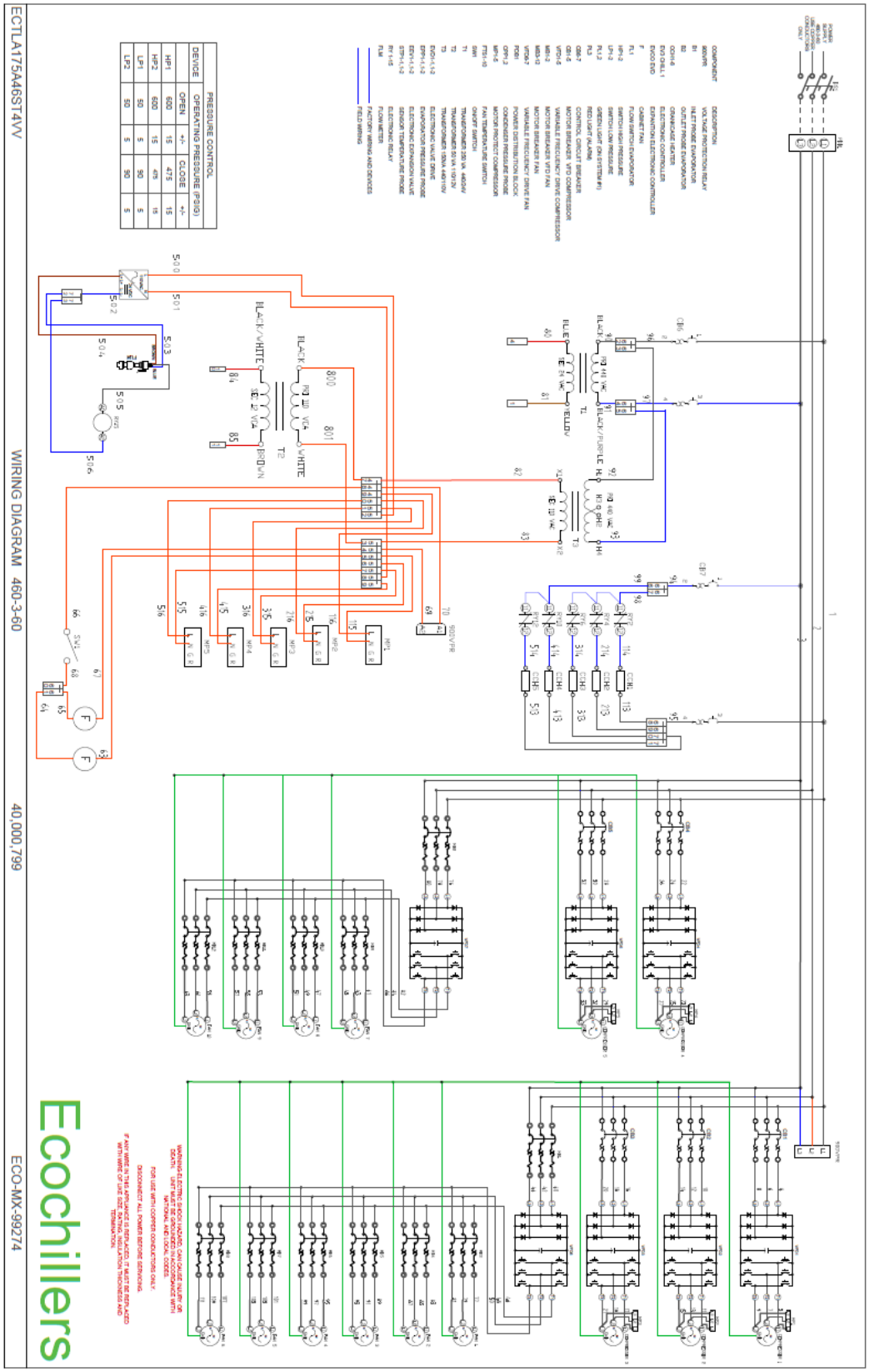

13.30 ECTLAP210A46SB4VV (210 TON)(Control)

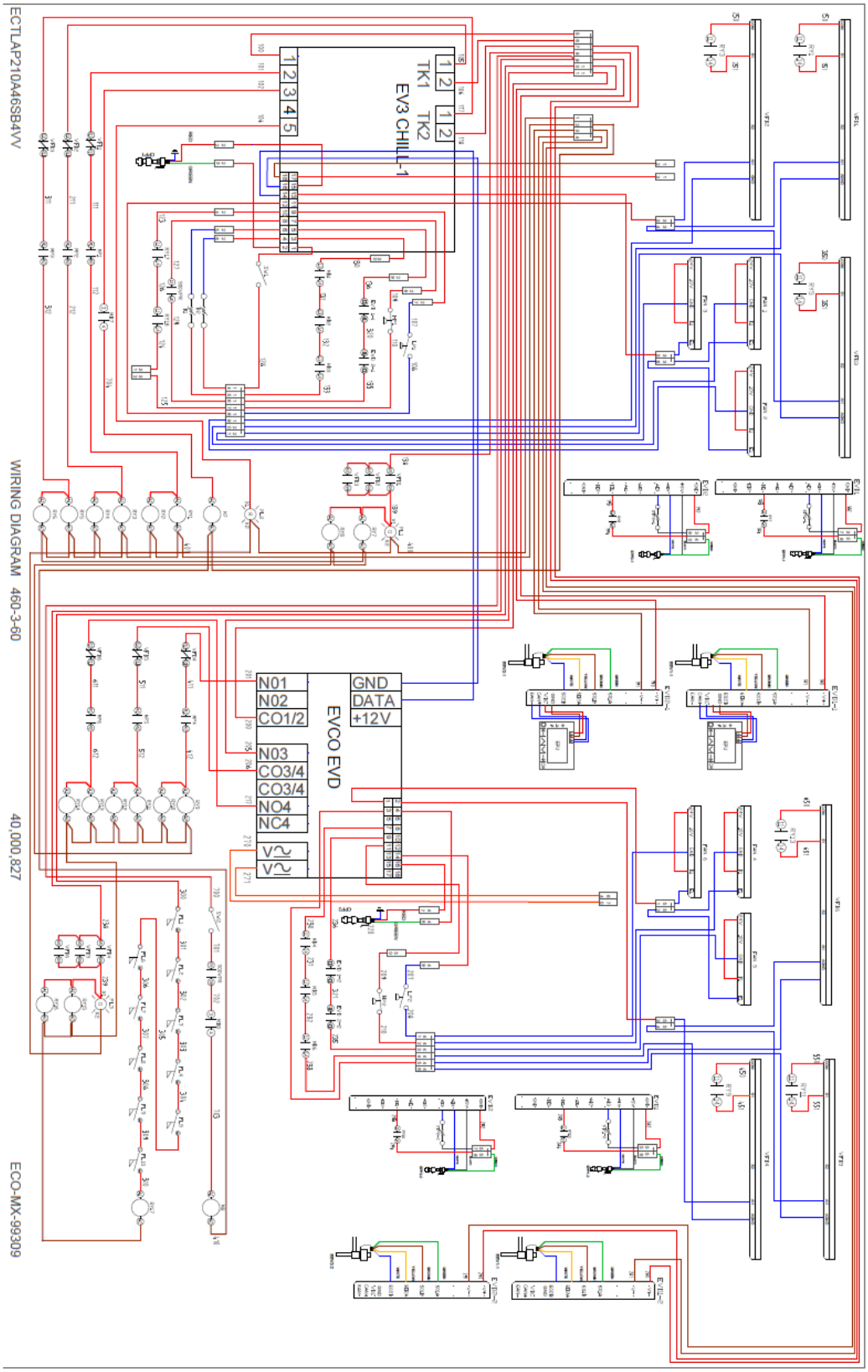

13.31 ECTLAP210A46SB4VV (210 TON)(Power)

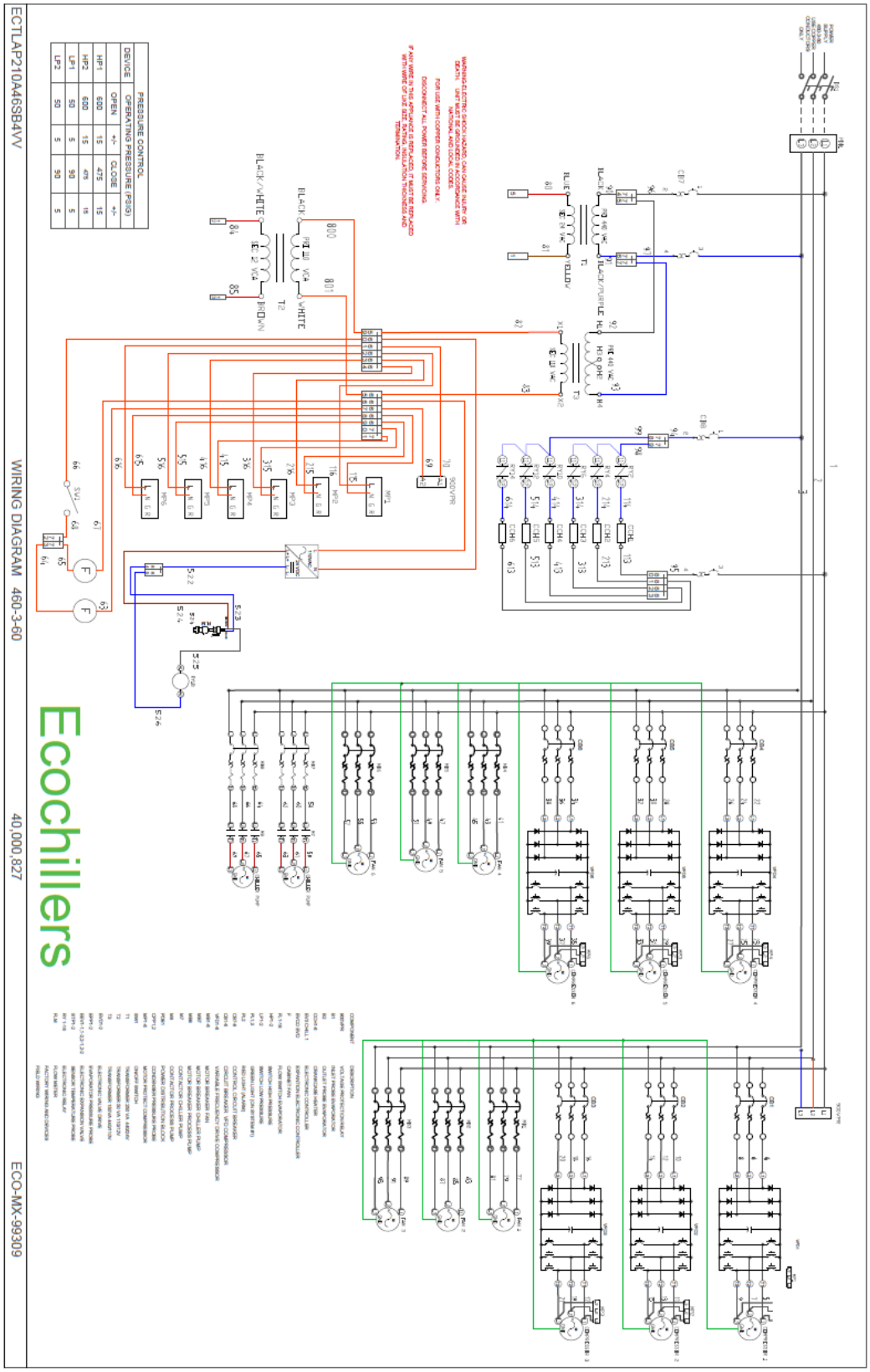

14 CERTIFICATE TÜV SÜD

ZERTIFIKAT ◆ CERTIFICATE ◆ 認證證書 ◆ СЕРТИФИКАТ ◆ CERTIFICADO ◆ CERTIFICAT

America

CERTIFICATE

No. U8 003144 0001 Rev. 00

Holder of Certificate: **Ecochillers Corporation s.a. de c.v.**
Ramon Corona #645-B
45580 Guadalajara
MEXICO

Production Facility(ies): 003144

Certification Mark:

C US

Product: **Cooling and freezing appliances**
Industrial Chillers

Model(s): ECCLASabbbb
Where
"a" can be C or H representing type of compressor employed (C: Screw Compressor, H: Semihermetic Compressor)
"bbbb" are four digits numbers representing tonnage

Parameters:
Rated Input Voltage: 480Vac
Rated Frequency: 60Hz
Rated Input Current: Up to 258A per circuit Branch, up to 774A combined
Protection Class: PE-Connection

Tested according to: CAN/CSA-C22.2 No. 60335-2-40:2012
UL 60335-2-40:2012

The product was voluntarily tested according to the relevant safety requirements noted above. It can be marked with the certification mark above. The mark must not be altered in any way. This product certification system operated by TÜV SÜD America Inc. most closely resembles system 3 as defined in ISO/IEC 17067. Certification is based on the TÜV SÜD "Testing and Certification Regulations". TÜV SÜD America Inc. is an OSHA recognized NRTL and a Standards Council of Canada accredited certification body.

Test report no.: 7169000418-000

Date, 2019-01-11

(Alfio Marrello)

US-Letter / 07.17

Page 1 of 1
TÜV SÜD America Inc. • 10 Centennial Drive • Peabody • MA 01960 • USA

TÜV®

15 TÜV SÜD CERTIFIED NOMENCLATURE

NOMENCLATURE

MODEL SERIES

ECT L A/W 012 A 25/46 N/P ST/B HR 4 B E S L

PRODUCT CATEGORY
- **ECT=** Scroll
- **ECC=** Ultra (semihermetic, screw)

REFRIGERATION SISTEM TYPE
- **L=** Liquid chiller

APLICATIONS
- **A=** Air cooled scroll compressor
- **AP=** Air cooled process includes recirculating pump, tank, float level ctrl.
- **ASH=** Air cooled semihermetic compressor
- **ASHP=** Air cooled semihermetic compressor process
- **ASC=** Air cooled screw compressor
- **ASCP=** Air cooled screw compressor process
- **W=** Water cooled scroll compressor
- **WP=** Water cooled scroll compressor process
- **WSC=** Water cooled screw compressor
- **WSH=** Water cooled semihermetic compressor
- **WSCP=** Water cooled screw compressor process
- **WSHP=** Water cooled semihermetic compressor process

NOMINAL COOLING CAPACITY-MBH

ECT/NANO/PICO		ULTRA	
012= 1 ton	**025=** 25 ton	**011=** 10.7 ton	**068=** 59.6 ton
018= 1.5 ton	**030=** 30 ton	**013=** 12.6 ton	**072=** 68.8 ton
024= 2 ton	**035=** 35 ton	**015=** 14.9 ton	**090=** 86 ton
003= 3 ton	**038=** 38 ton	**018=** 17.2 ton	**108=** 103.2 ton
005= 5 ton	**040=** 40 ton	**022=** 21.4 ton	**126=** 120.4 ton
008= 7.5 ton	**050=** 50 ton	**026=** 25.2 ton	**144=** 137.6 ton
010= 10 ton	**060=** 60 ton	**031=** 29.8 ton	**158=** 154.8 ton
013= 12.5 ton	**070=** 70 ton	**036=** 34.4 ton	**180=** 189.2 ton
015= 15 ton	**105=** 105 ton	**047=** 45 ton	**200=** 189.2 ton
020= 20 ton	**140=** 140 ton	**053=** 51.6 ton	**215=** 206.4 ton

AIR FLOW
- **A=** Standard motor

VOLTAGE OPTIONS
- **25=** 280/230/3/60
- **46=** 460/3/60
- **38=** 380/3/50
- **57=** 575/3/50
- **06=** 220/1/60
- **05=** 110/1/60
- **40=** 400/3/50

SERIES TYPE
- **N=** Nano
- **P=** Pico

HEAT EXCHAGER TYPE
- **ST=** Shell and tube
- **B=** Brazed plate
- **0=** Open
- **SB=** Shell box

23/03/22

HEAT OPTION
- **HR=** Heat recovery
- **HP=** Heat pump

23/03/22

NOTE
Double underline can be inside or outsidevthe model series

IMPORTANT NOTE
Any model change not found in the chart, will be analyzed by the engineering department for its approval, theres not allowed to be changes whit out prior notice.

NATURAL ENERGY RESOURCE
- **S=** Package of solar panels included

FAN OPTION
- **E=** Electronically commutaded fan

COMPRESSOR OPTION
- **B=** Brush less compressor
- **V=** Variable speed compressor
- **H=** Hybrid compressor system (standard scroll + brush less scroll)

REFRIGERANT TYPE
- **4=** R-410A
- **5=** R-507
- **47=** R-407C
- **22=** R-22
- **14=** R-134A

OUTSIDER BRAND
- **L=** Lennox
- **C=** Carrier
- **Y=** York

VER. 4.1 AUG/24/18

16 ACKNOWLEDGMENTS

We want to express our most sincere gratitude to all the people who have made possible the creation of this “Installation, Operation and Maintenance” Manual. First of all, we want to thank our Development team for their hard work and dedication to create a high-quality product.

We also want to thank our customers and users for their trust in us and for their valuable feedback, which has helped us to improve and perfect our product.

We also thank the following staff:

- Ing. Ricardo Tornel Garcia, for the start in the elaboration of this manual.
- Ing. Irving Malpica Cruz, for his support and knowledge provided for the preparation of this manual.
- Ing. Isaac Gómez Camacho, for his contribution of all electrical and electronic information.
- Ing. Victor Ruiz, for all the technical drawings, the conclusion, editing and revision of this manual.